CP6323-0000-D100/D106-M262
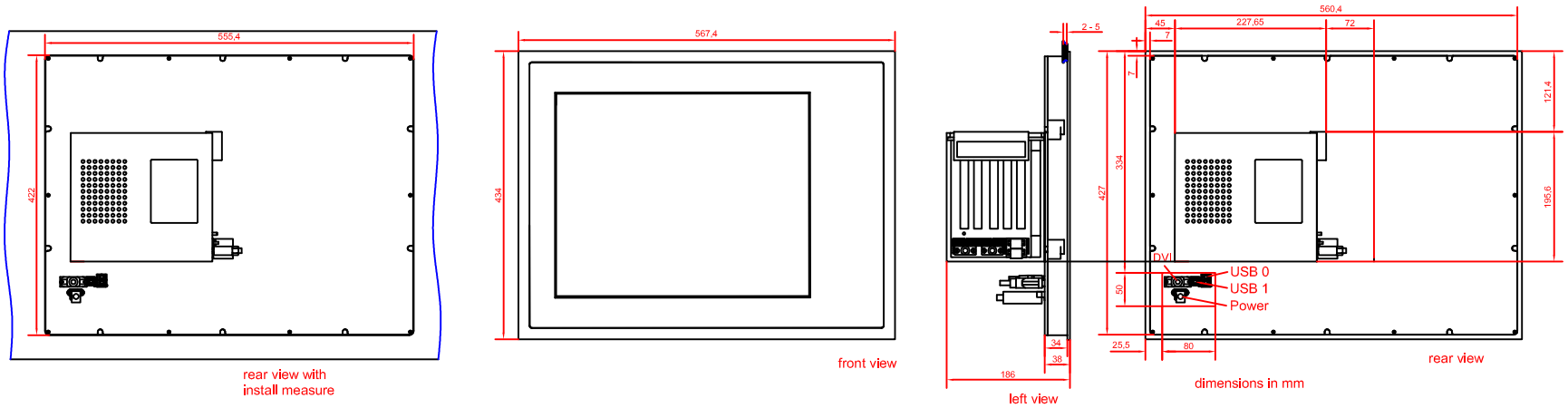
main dimensions