CP6302-0010-0010-D100/D106-M262
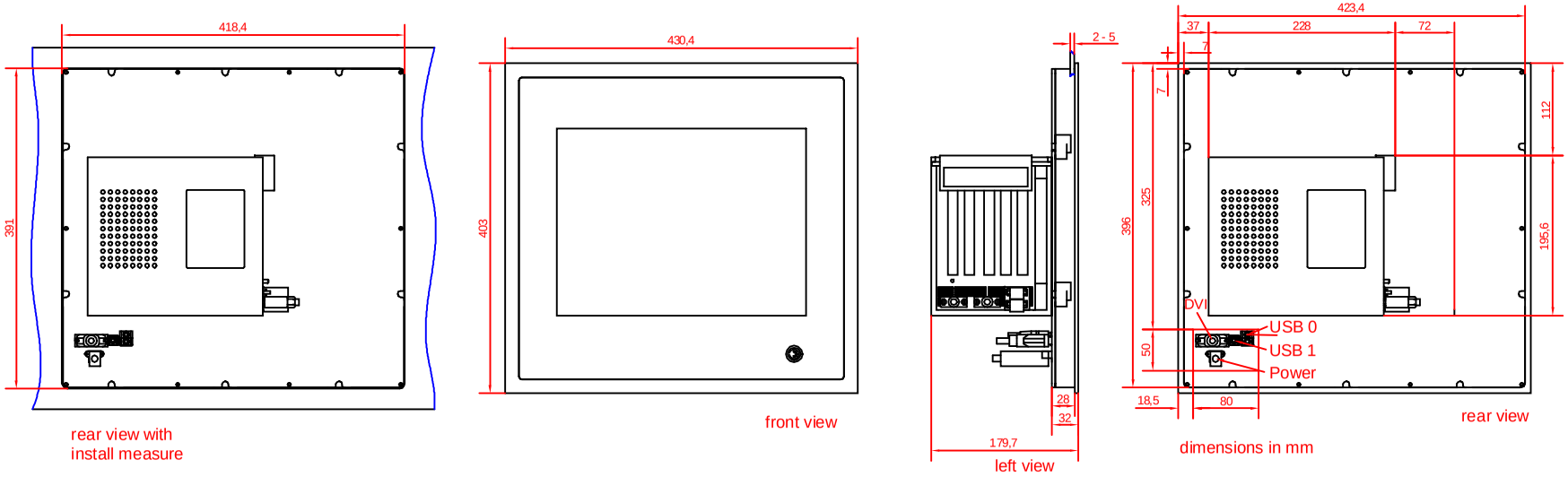
main dimensions