CP7702-0010

main dimensions and
fixing points

dimensions in mm

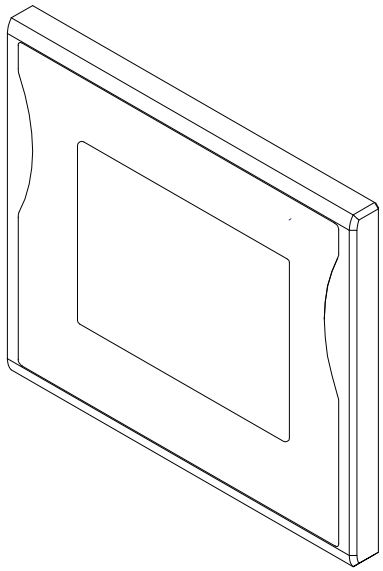

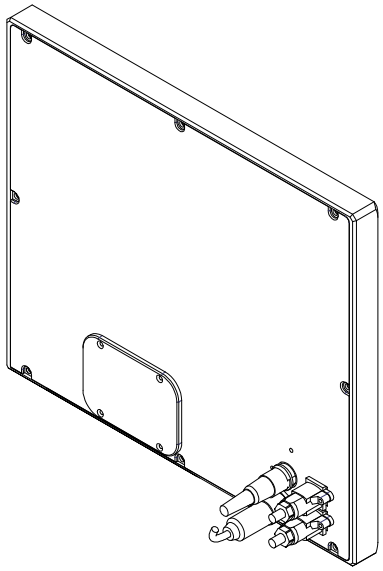

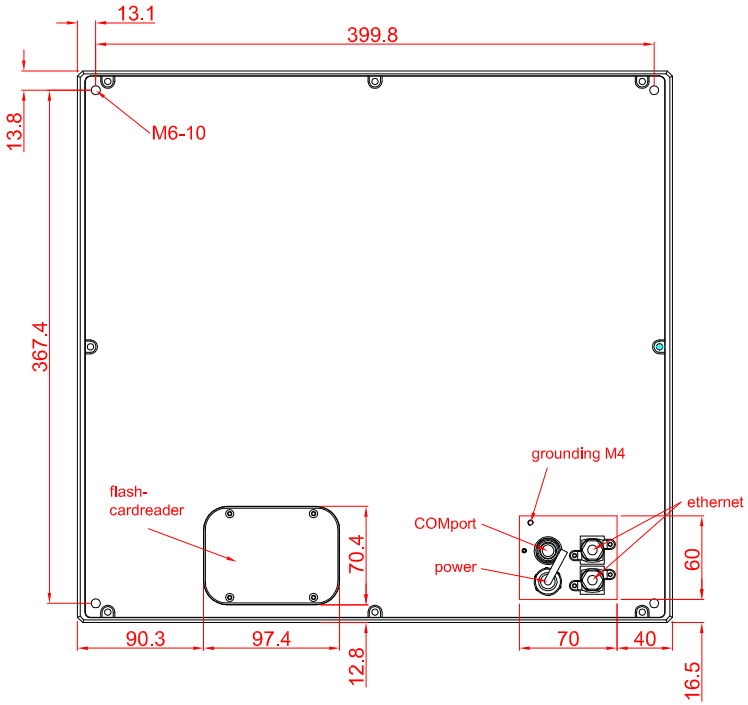

rear view

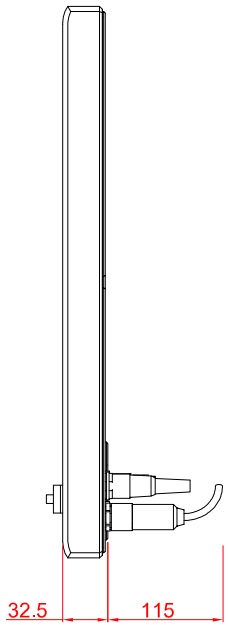

right view

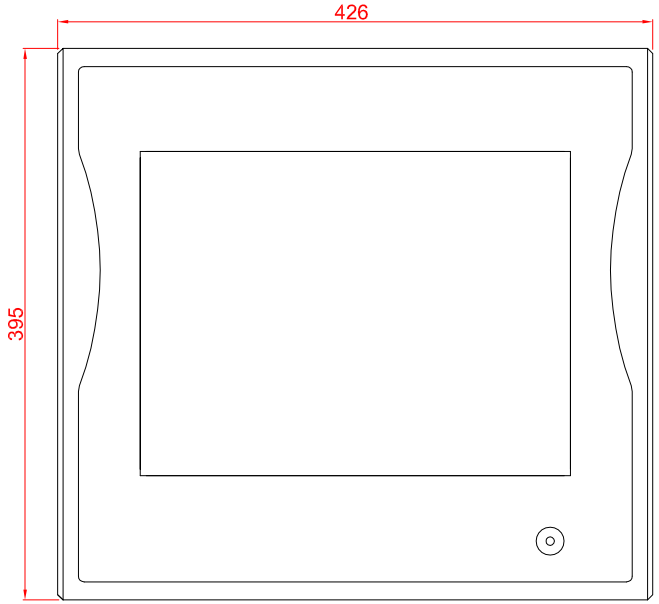

front view