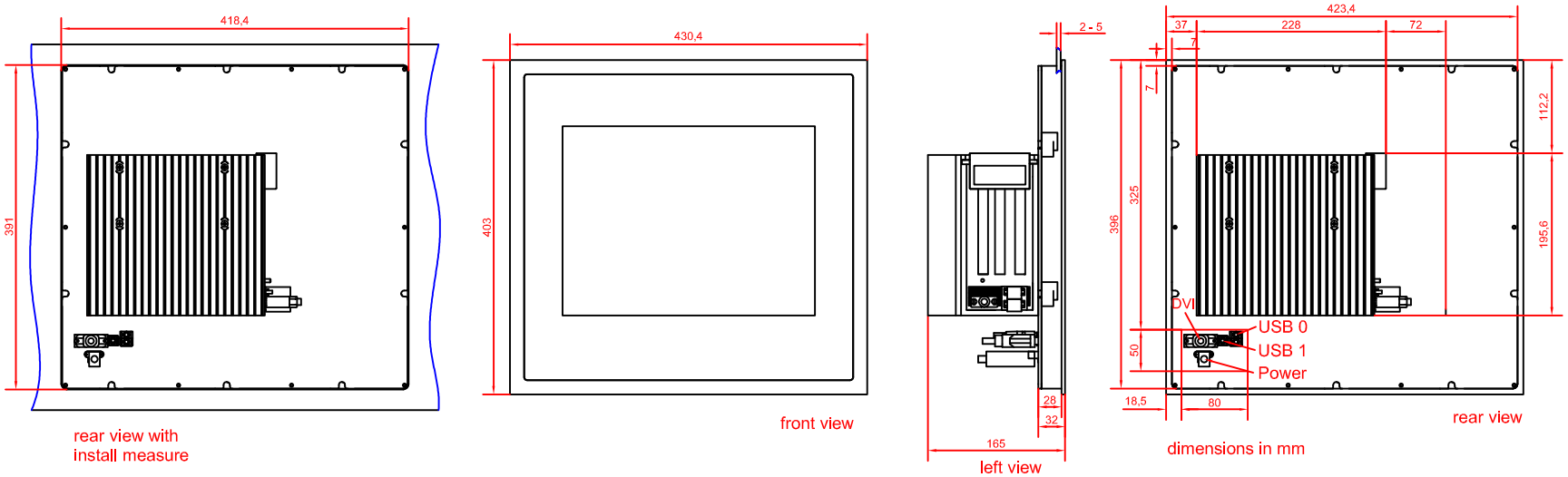CP6312-0000-M261
main dimensions