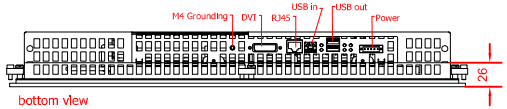

bottom view

CP6932-0002
main dimensions

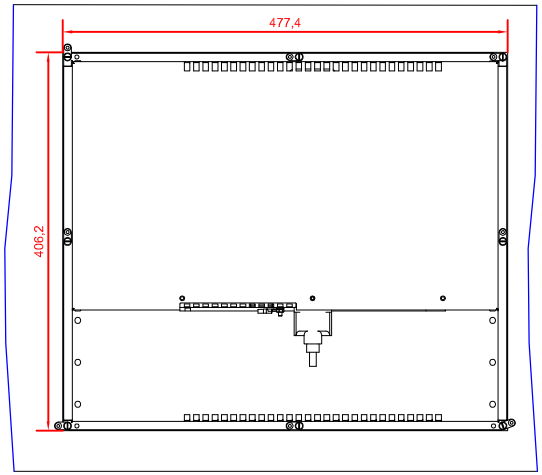

rear view
with
Install measure

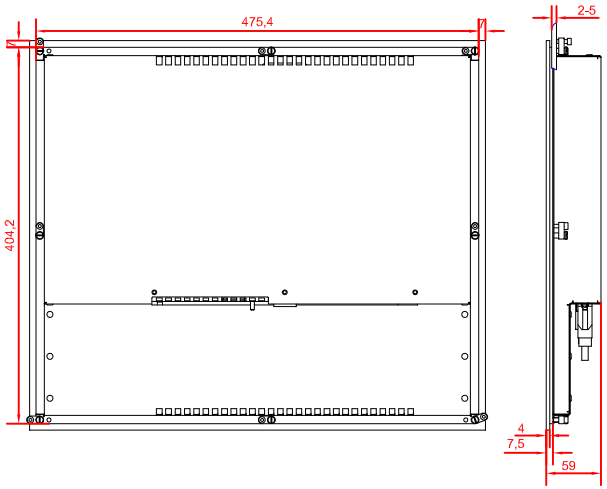

rear view

right view

dimensions in mm

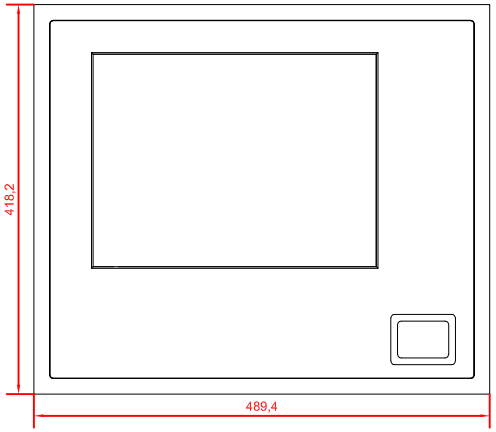
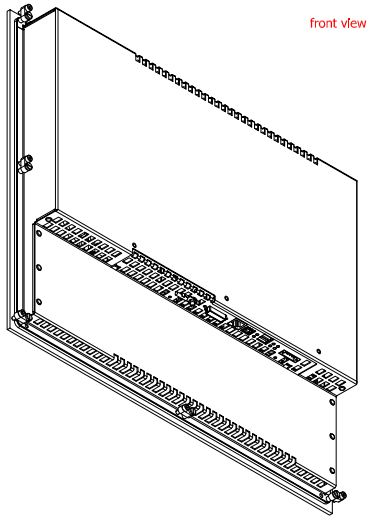
front view