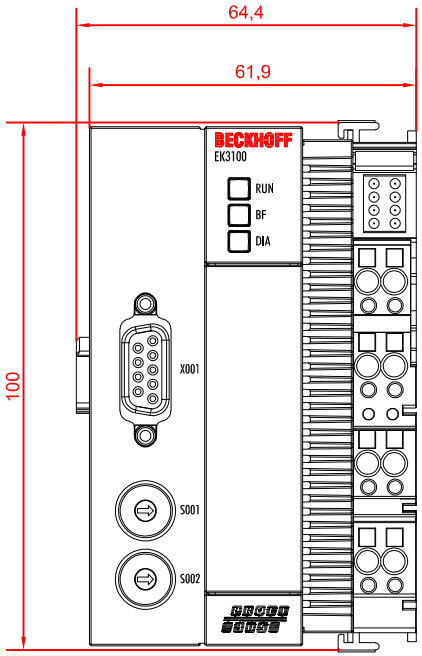

front view

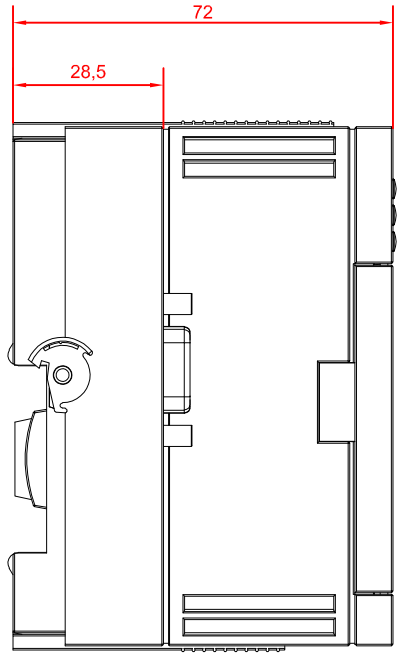

left view

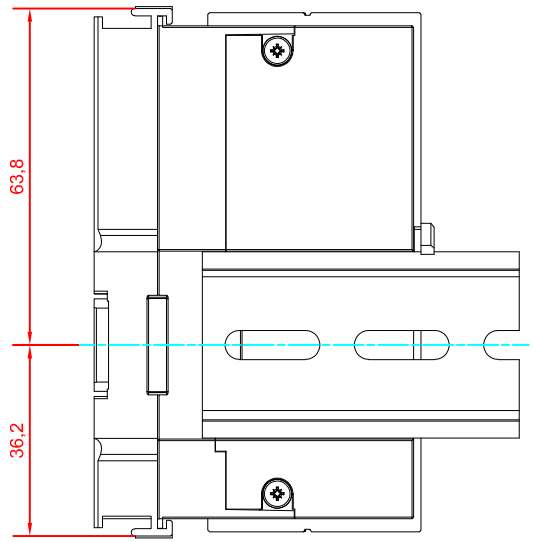

rear view

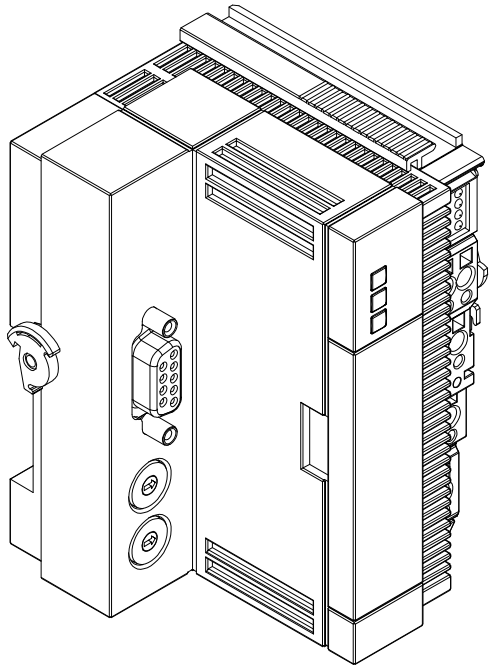

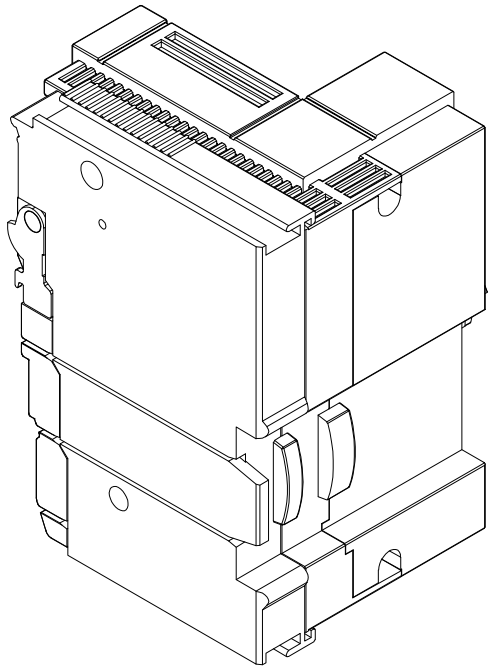

EK3100
main dimensions
and fixing points

dimensions in mm