Cross-factory synchronisation for fieldbus using EtherCAT

The transmission rate of fast Ethernet combined with the protocol efficiency of EtherCAT enable the operation of several subordinated fieldbuses. Classic fieldbus interfaces provided in the Industrial PC are sourced out to intelligent interface terminals in the EtherCAT I/O system. Besides the local I/Os, axes and operating devices, complex systems such as fieldbus masters, serial interfaces, gateways and other communication interfaces can also be addressed over a PC Ethernet port. In short, existing fieldbus devices can be integrated seamlessly into an EtherCAT system

PHOTO: BECKHOFF/FERAG AG

CLASSIC PC CONTROLLERS often run into a bottleneck in the case where computing power is lost through the PCI bus accessing the PCI fieldbus cards. To give some perspective on this, an application with perhaps 50 Profidrive axes controlled via Profibus DP with a cycle time of 2ms will require an extra 25% of computing power just to access the PCI cards.

This loss of computing power results from the fact that PCI cards usually work like a PCI slave, i.e., the PC accesses a dual-port RAM via the 33MHz PCI bus. In the WRITE direction, this access can still be decoupled via intelligent PCI drivers if need be, but during the READ access, the PC must wait until the data has actually been read. A 33MHz access rate creates a considerable bottleneck when runnning up against a 2GHz processor. In the case of EtherCAT, access takes place via an Ethernet controller in the PC, which is normally connected to the PC controller using high-performance DMA access. The transmission of the fieldbus data runs in parallel to the PC's other tasks so that the PC has the complete computing power at its disposal.

The EtherCAT/fieldbus gateways, which replace the conventional PCI cards, use the flexible topology of EtherCAT networks which can be wired peripherally to the machine.

The EtherCAT modular device profile describes the EtherCAT interface for the various fieldbus gateways. Thanks to this uniform interface definition, the gateway integration is not restricted to TwinCAT systems, in which all EtherCAT/fieldbus gateways are comfortably integrated. This solution can be applied to other control systems since few new functions need to be added to the controller with each new gateway.

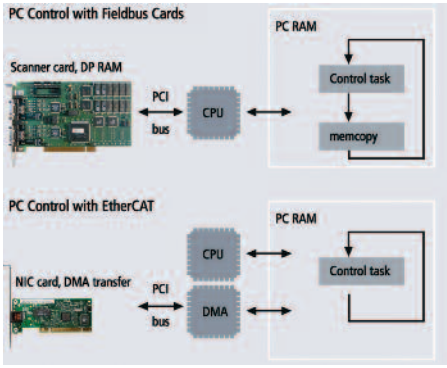

EtherCAT access uses fast DMA access. This removes the PCI processing bottleneck

The Ethernet connection produces a further advantage beyond the performance hike: a PC cards are no longer required and and so the PC controller design can be simplified, perhaps reducing to the state of an embedded controller device. Embedded controllers require only an Ethernet connection to provide the interface for the process peripherals.

Synching up the system bus

Networks based on EtherCAT work well as the system bus for more complex devices, for instance welding controllers. Such applications require a system bus capable of transmitting I/O data with a 125µs cycle time - and with determinism. However, such devices must also support differing fieldbus interfaces so that, depending on the application, they can be integrated in superordinated fieldbus networks. Depending on system requirements, the appropriate EtherCAT/fieldbus gateway can handle this job without fuss.

This class of device often need to be synchronised to external applications to the exact microsecond. The control accuracy of distributed clocks and the standardised EtherCAT External Synchronisation Interface are advantageous here, such that synchronisation to an external event always takes place in the same way, independent of whether the external application is connected via EtherCAT, IEEE1588, Profibus MC, Profinet IRT or even via a digital input.

Using distributed clocks and the distributed clock regulators in EtherCAT slave controllers, all devices in an EtherCAT network can be synchronised with one another with an accuracy of less than 100ns. To do this, the EtherCAT master sends a special telegram containing the system time to be read at the first distributed clock device (local master clock) and written at the subsequent distributed clock devices (slave clocks). The distributed clock regulator in the slave controller is stimulated by the write access to the slave clocks to compare the received system time with the local time. The local system time is changed by a very small increment in accordance with the deviation, either in one direction or the other. The comparison of ▶

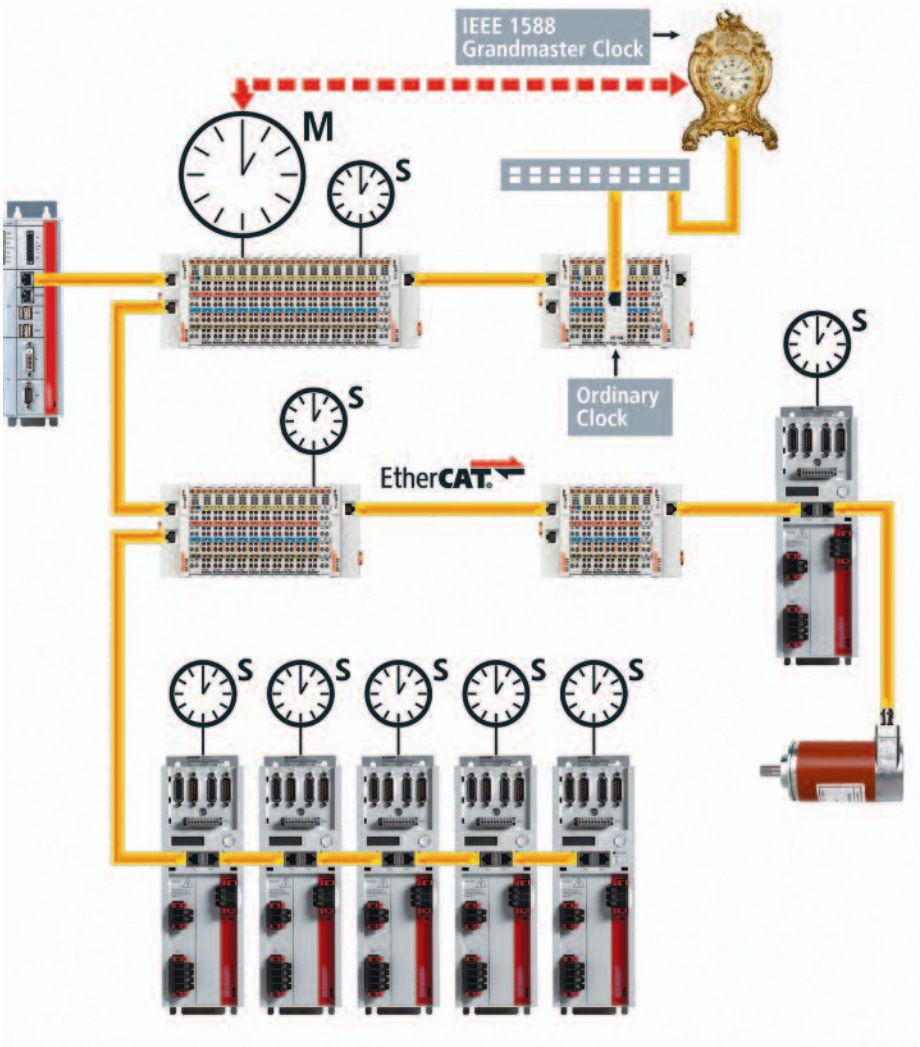

the two system times is a simple larger/smaller comparison, which the external synchronisation principle also uses.

If the EtherCAT network is to be synchronised to a global master clock, the local master clock must be readjusted. This takes place in a similar fashion by slightly changing the system time of the local master clock: writing a value that is too large or too small in one direction or the other. The number of write accesses and the direction of the change is determined by the EtherCAT/fieldbus gateway. This is bound to the global master clock via the fieldbus and the standardised external synchronisation interface of the EtherCAT network.

Using IEEE 1588

The diagram (**above**) shows an EtherCAT to IEEE1588 gateway to which a global clock (grandmaster clock) is connected. Using the standardised external synchronisation interface of the EtherCAT/IEEE1588 gateway, the EtherCAT master receives the information regarding how many write accesses to the system clock or the local master clock are to take place and whether a value that is too small or too large should be written. The external synchronisation interface consists of standardised CoE objects, which can be read by the EtherCAT master acyclically per SDO or cyclically via the process data. Besides the number of write accesses (time control value with corresponding sign that specifies whether a value that is too small or too large is to be written) and the information regarding whether or not the time control value has been regenerated, the external synchronisation interface also encompasses one time stamp each from the local and the global master clock. In this way, the calculation of the time control values can also take place in the EtherCAT master application.

The task of the master or the external synchronisation may be restricted to reading out the time control value cyclically and, according to its sign and value, executing a number of write telegrams with a very small or a very large value to the system time of the local master clock. At the same time, this system has the advantage that the EtherCAT slave with the External Synchronisation Interface can be located at any desired position in the EtherCAT network.

FOR MORE INFORMATION CIRCLE **XX**

Applied protocols:

EtherCAT case study

SWISS COMPANY Ferag AG, located in Hinwil near Zurich, specialises in the conveying and handling of newspapers after the initial printing process. The company has developed production modules with high-tech controllers for NZZ Print, the print shop for *Neue Zürcher Zeitung*, equipped with Beckhoff CX1020 embedded PCs, the TwinCAT software PLC and EtherCAT.

The finished newpaper comes folded and cut out from the printing press line. Depending on the size of the issue, special newspaper sections and supplements must be laid automatically inside the main newspaper. After the inserts have been added, the address of the recipient is printed on the newspapers and on the accompanying tickets for the newspaper parcels. Finally, the dispatch units are created by wrapping them with a plastic film. Tracking the newspapers through the entire production process is an essential part of the application.

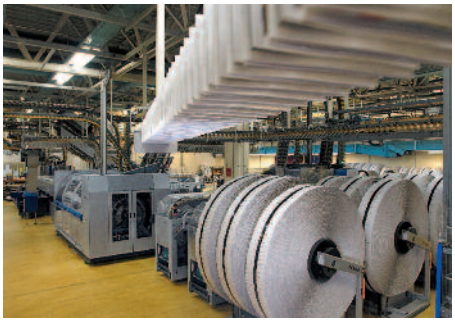

The finished newpaper comes folded and cut out from the printing press line. Depending on the size of the issue, special newspaper sections and supplements must be laid automatically inside the main newspaper. After the inserts have been added, the address of the recipient is printed on the newspapers and on the accompanying tickets for the newspaper parcels. Finally, the dispatch units are created by wrapping them with a plastic film. Tracking the newspapers through the entire production process is an essential part of the application.

NZZ Print uses virtually the entire range of processing modules offered by Ferag. The linking conveyor equipment is a most spectacular sight: as if on a string of beads, the

newspaper sections are conveyed on the typical Ferag yellow clips at breakneck speed in all directions through the plant – horizontally, vertically, crossing the room without errors.

The reliability of the plant components is mandatory in the application. This concerns, for example, the machine operation, flexibility in adapting production conditions, interaction in the form of visualisation, display of process status and the like.

Four lines lead from the new Rotation, as the print line in Zurich is called, to the Finishing department. Two of them are main lines, which integrate the insertion area and lead to the packaging area. The two remaining lines are implemented as so-called auxiliary lines. The redundant plant concept covers capacity requirements and, over and above that, serves for production safety. The possible capacity depends on the scope of production, but it can be up to 80,000 copies per hour.

On the control side, the individual workstations are controlled by the Beckhoff CX1020 embedded platform with EtherCAT Terminals, networked via EtherCAT. Embedded PCs are overlaid by a control technology that was developed by Ferag. In deciding in favour of Beckhoff, one important argument was that

Ferag already had experience with TwinCAT control software and remove capacity limitations of the previous control system. Many special solutions were previously used with proprietary hardware and local I/O components. In contrast the, EtherCAT solution offers flexible topology and high performance. Specialised modules that were previously implemented in hardware form have now be realised in software.

As the first Ferag modules, the three most important stations were equipped with the CX1020 Embedded PC: the stacker, for packaging; the release controller, which controls the inlet of the newspapers to the stacker; and the MultiSert insertion drum. One special feature of the control solution used at the NZZ is the use of the EtherCAT bridge module, which enables the bidirectional transfer of data from one EtherCAT strand to another. Both strands can also be synchronised via the bridge. An external infeed ensures that the main branch can continue to communicate when the auxiliary branch is switched off.

For example, the release controller handles the exact positioning of the 'released' newspaper in front of the ink-jet labeller and that this process must neither be interrupted nor allowed to get out of control. Reliable release is guaranteed through use of EtherCAT and fast I/O modules the company says.

On account of the high speed involved, the synchronisation of the controllers is also important with respect to the transfer of the newspapers from one transport system to another, which means that we cannot do without cross-communication between the embedded PCs. Synchronisation between communication devices that are far apart is further improved by the use of the distributed clocks function with microsecond accuracy.

FOR MORE INFORMATION CIRCLE **XX**