CP7722-0002
with
C9900-E868
C9900-M405

connection-console (by customer)
Rittal CP6206.490
Rittal CP6508.020

main dimensions and fixing points

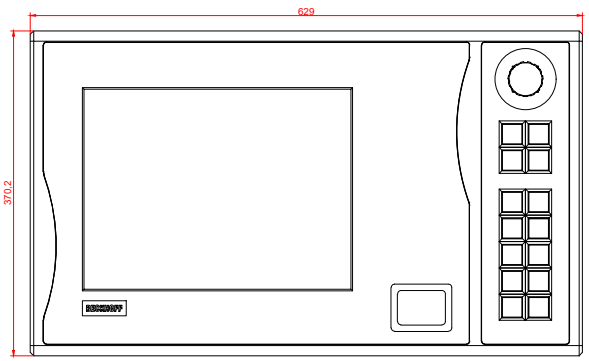

front view

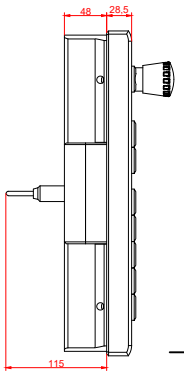

side view

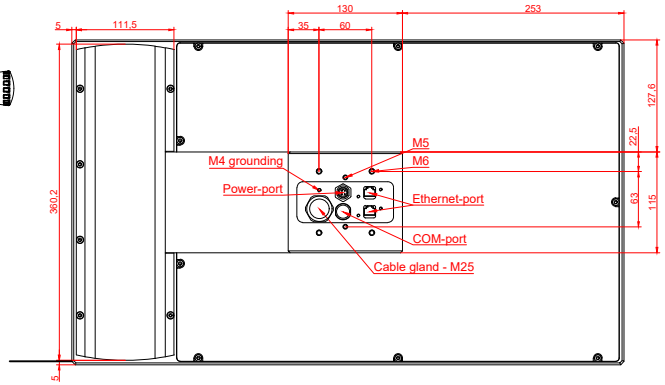

rear view

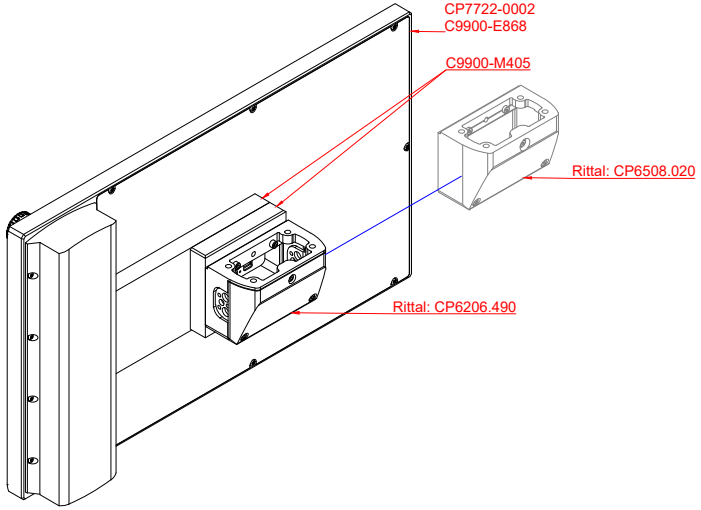

mounting arm adapter from top

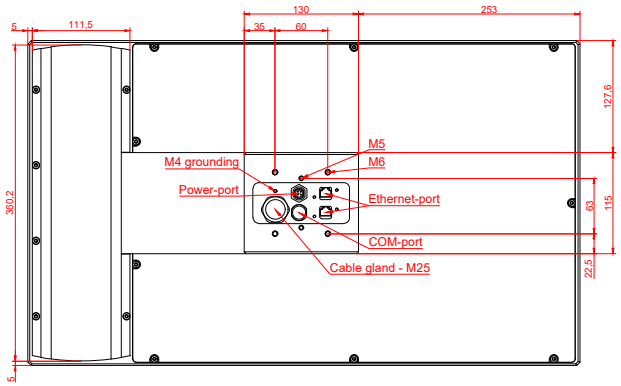

rear view

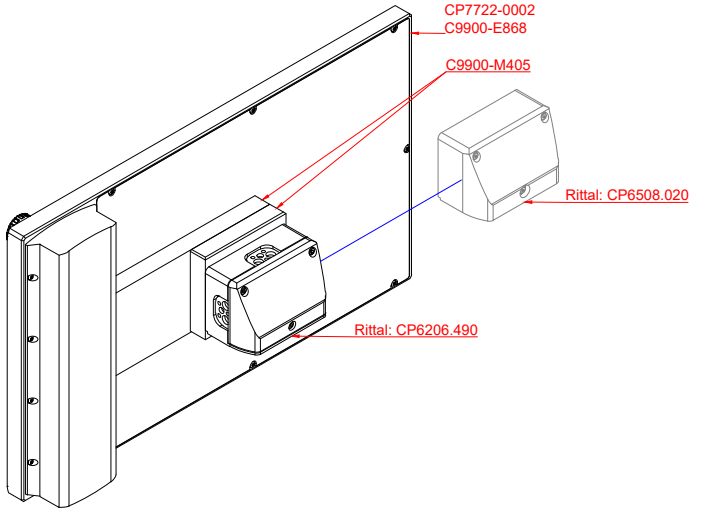

mounting arm adapter from bottom