CP7232-000x+E215+E577+M161+M400

Ø 48mm fixingtube

main dimensions and
dimensions in mm

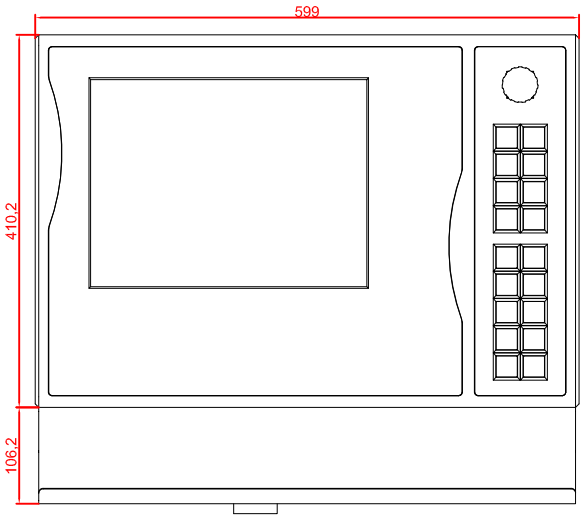

front view

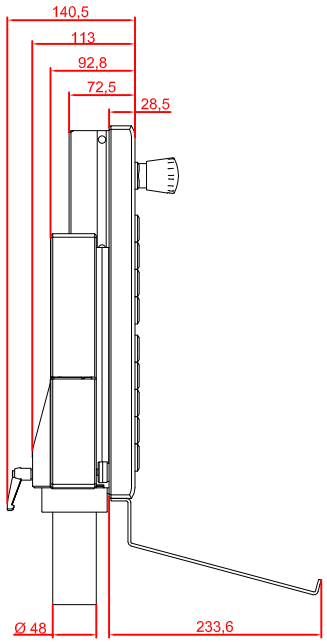

left view

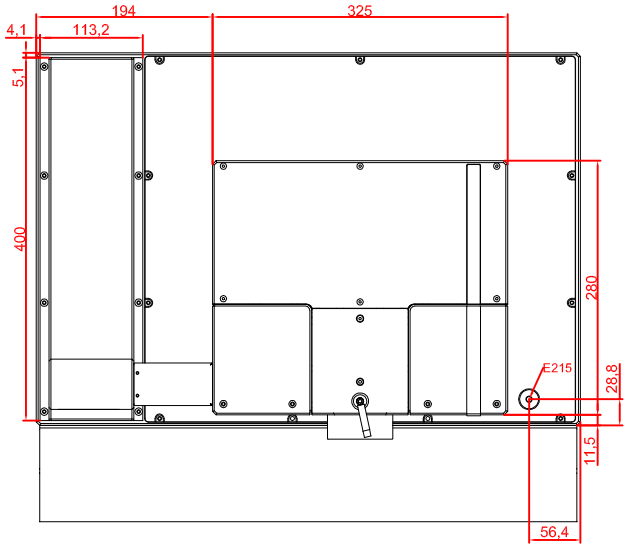
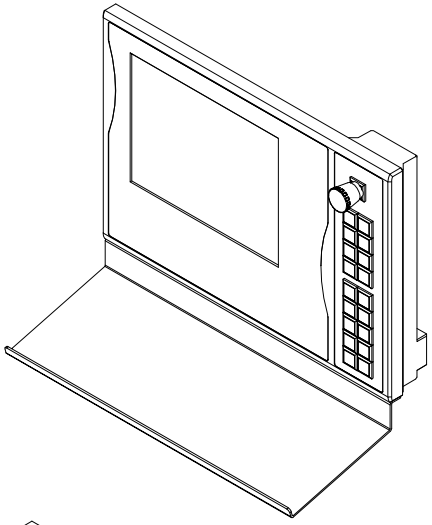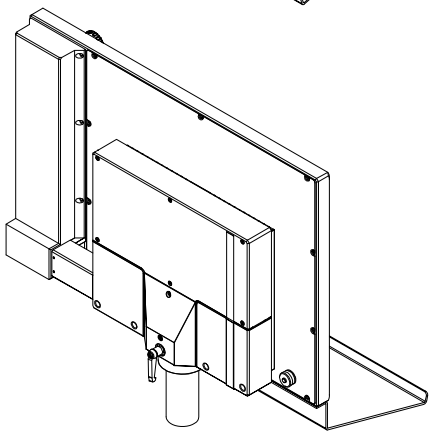
rear view