CP6323-0002-D100/D106-M262-M261
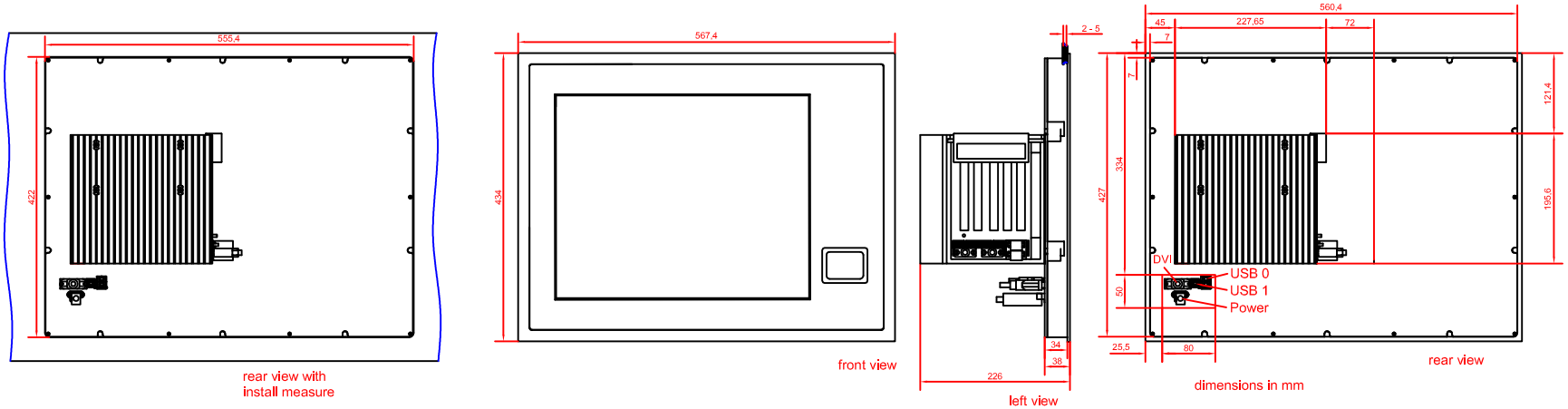
main dimensions