CP6320-0000-M261

main dimensions

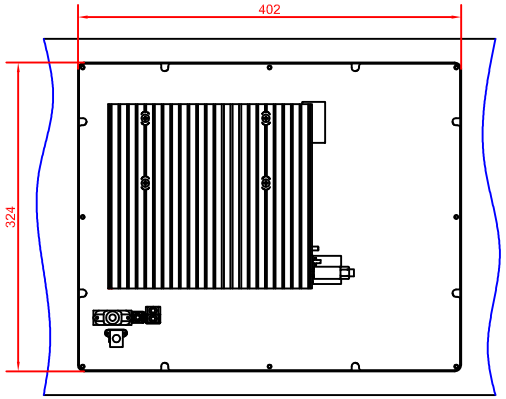

rear view with
install measure

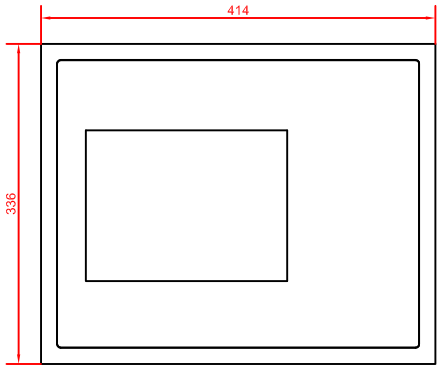

front view

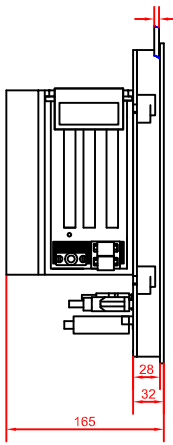

left view

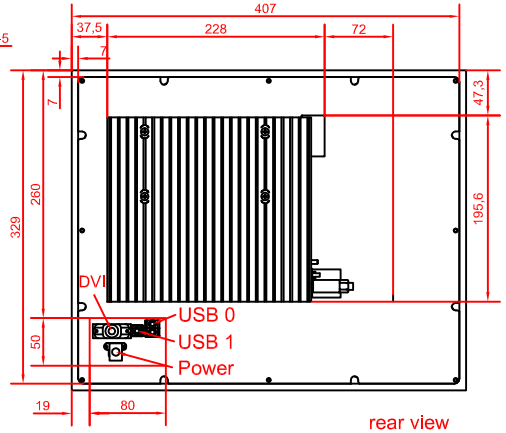

rear view

dimensions in mm