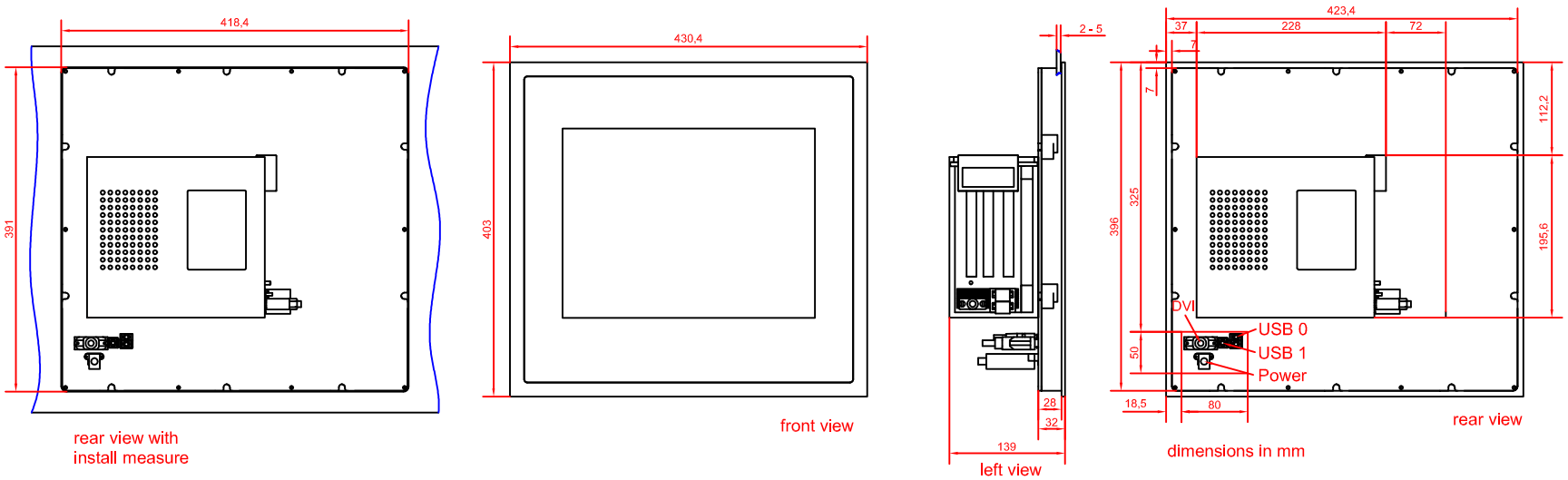CP6312-0001-D100/D106
main dimensions