CP6312-0001-D100/D106-M262
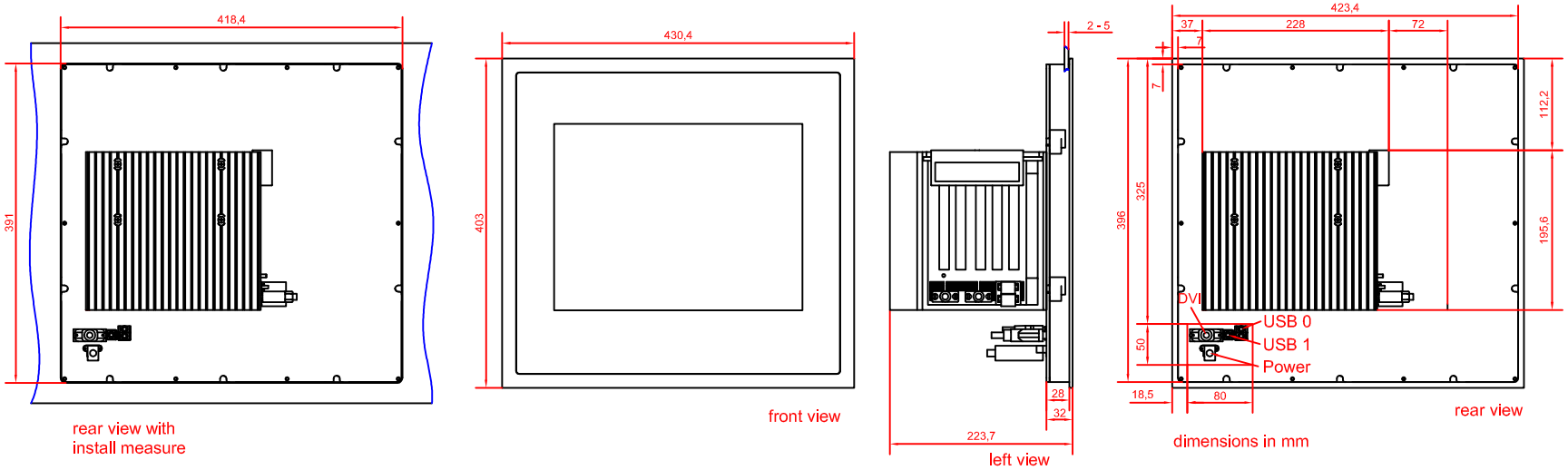
main dimensions