CP6302-0011-0010
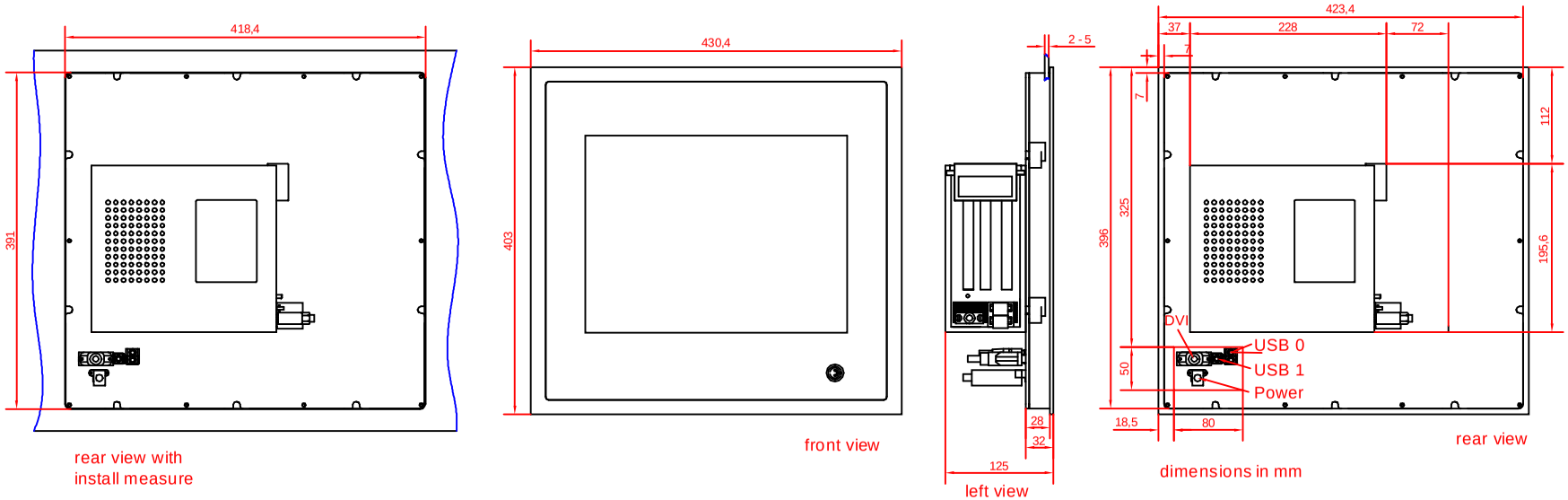
main dimensions