CP6302-0011-0010-D100/D106-M262-M261

main dimensions

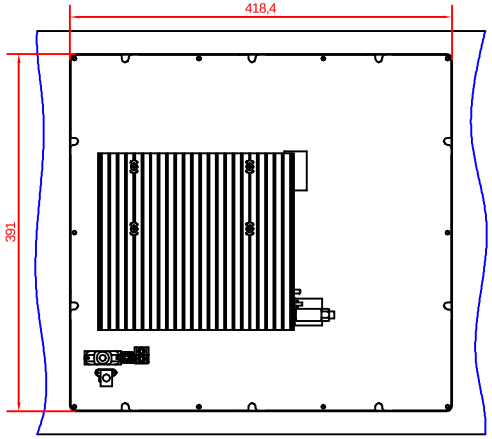

rear view with
install measure

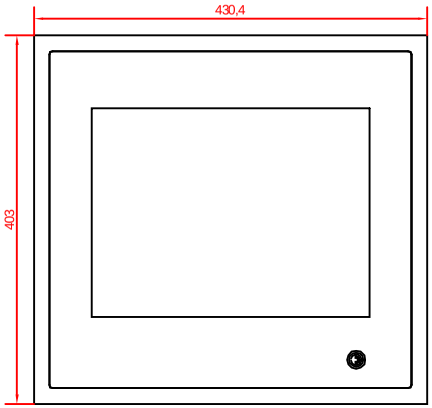

front view

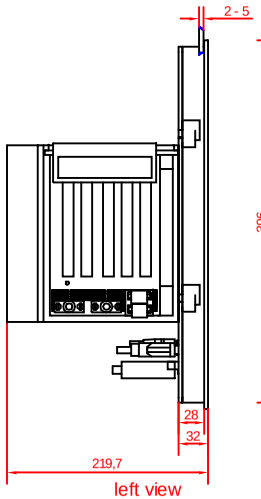

left view

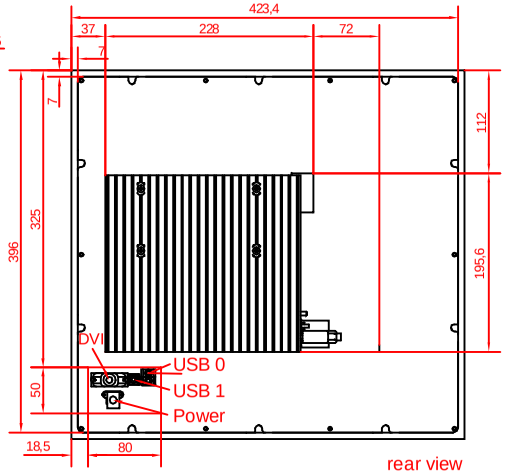

rear view

dimensions in mm