CP6302-0001-0010-D100/D106
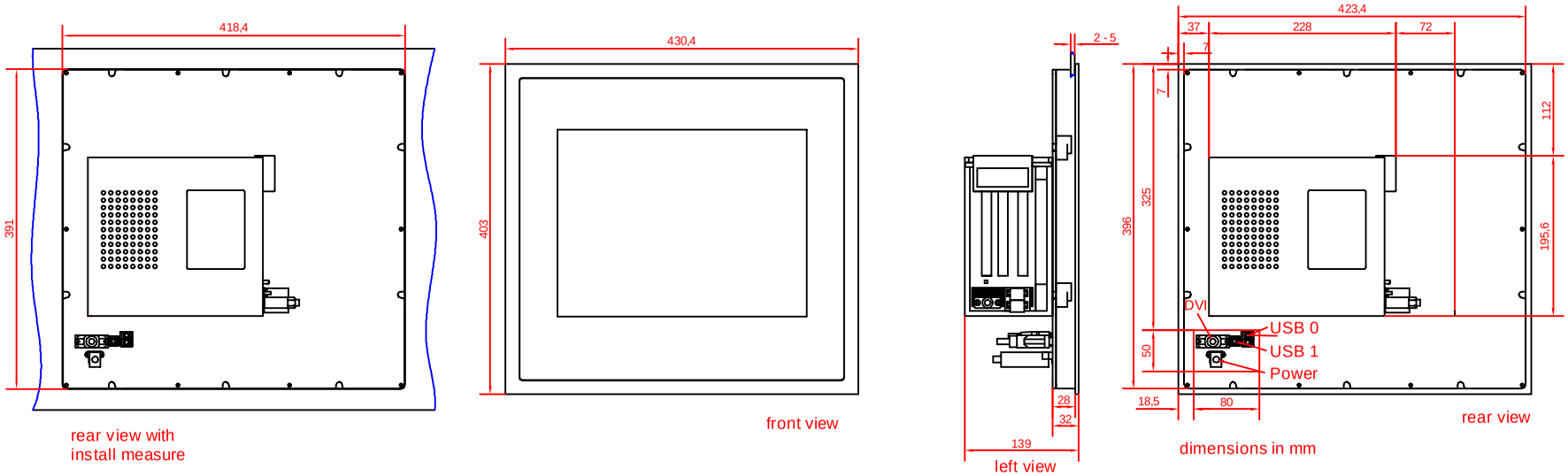
main dimensions