CP6301-0011-0010-D100/D106-M261
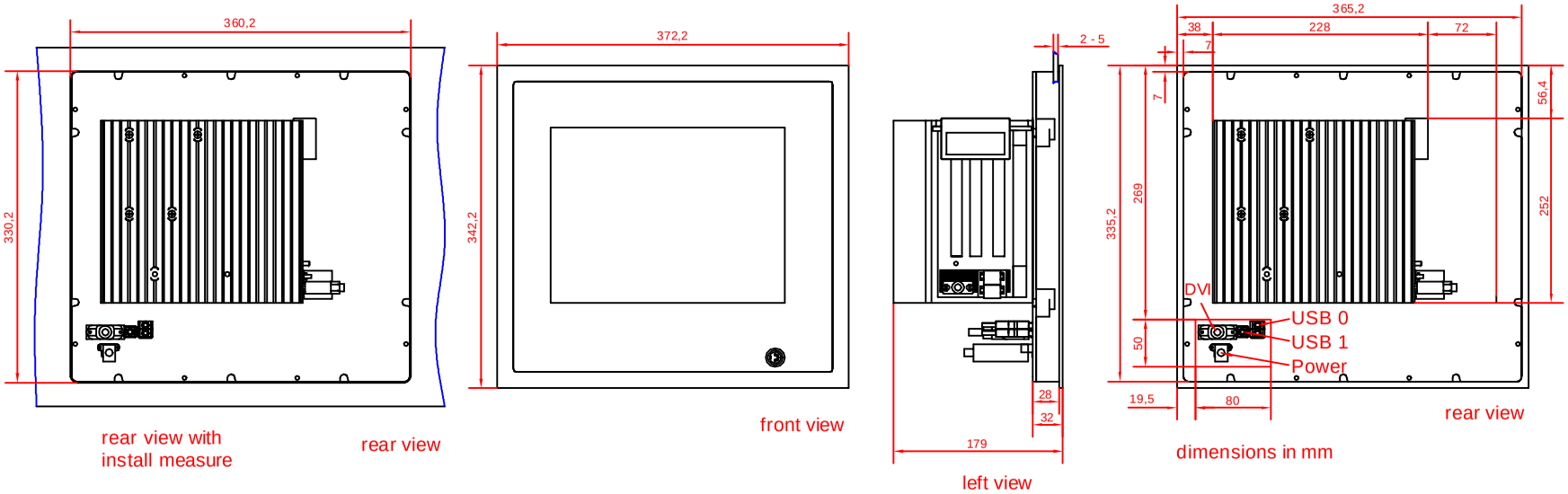
main dimensions