CP6300-0001-0010-D100/D106-M261

main dimensions

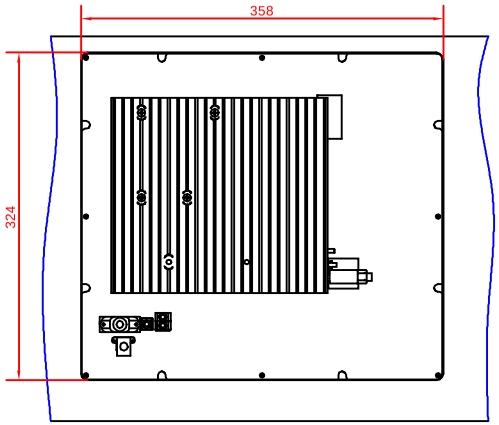

rear view with
install measure

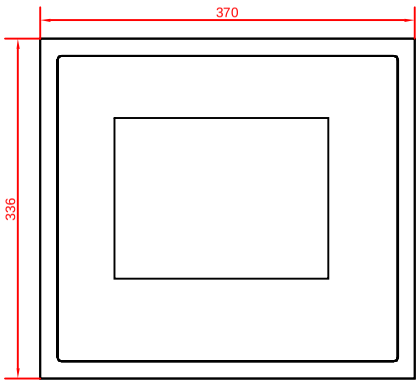

front view

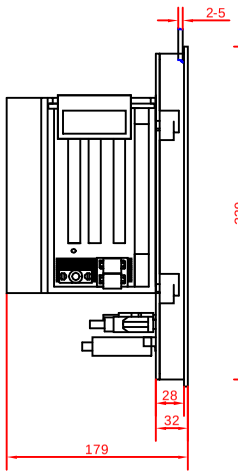

left view

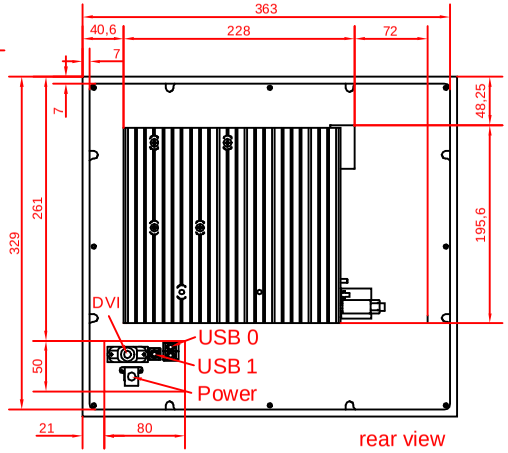

rear view

dimensions in mm