CP6242-0001
main dimensions

dimensions in mm

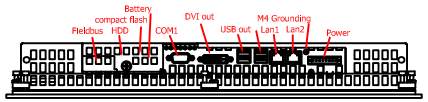

bottom view

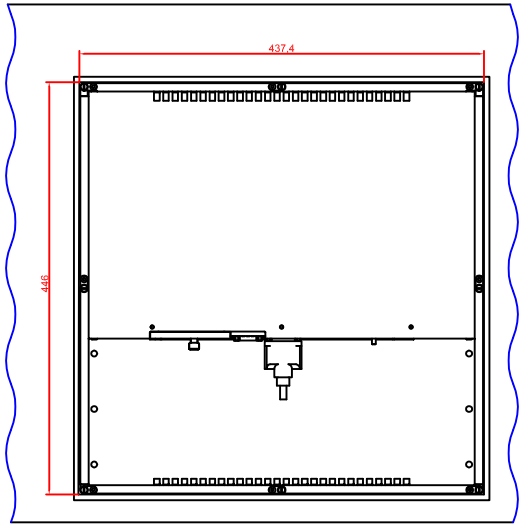

rear view
with
Install measure

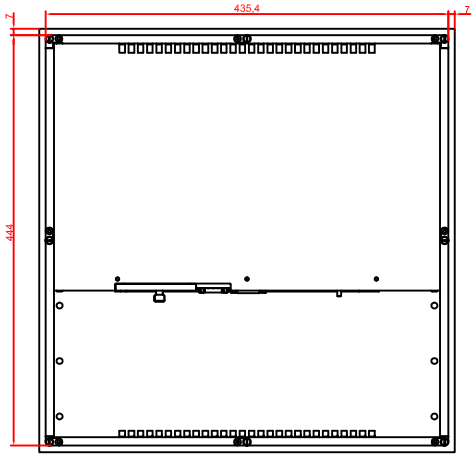

rear view

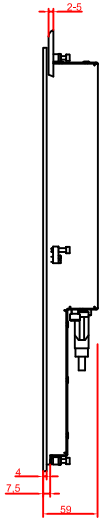

right view

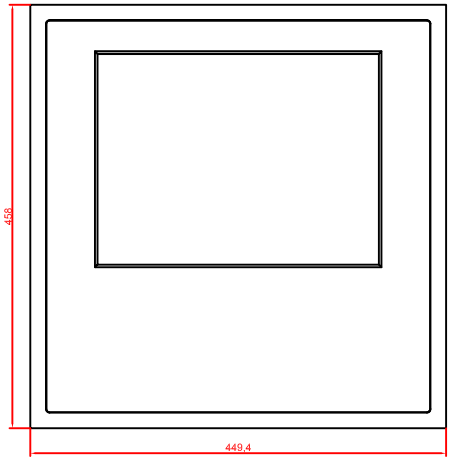
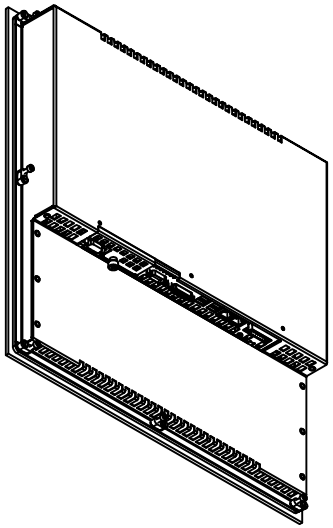
front view