CP6221-0001-0000
main dimensions

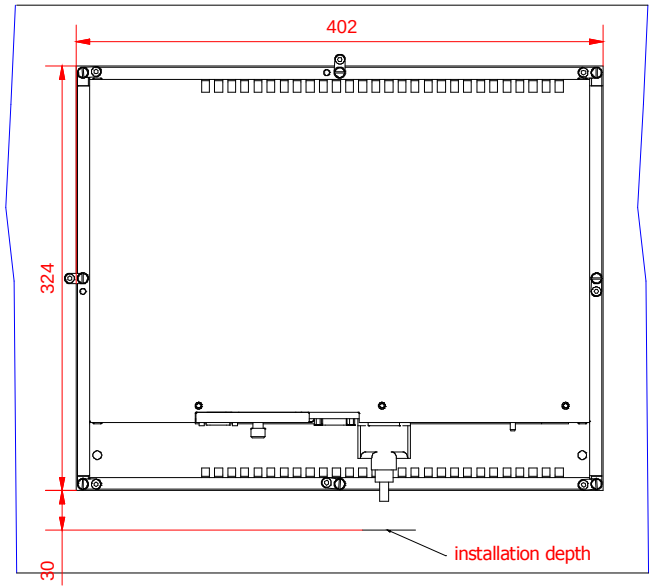

rear view
with
install measure

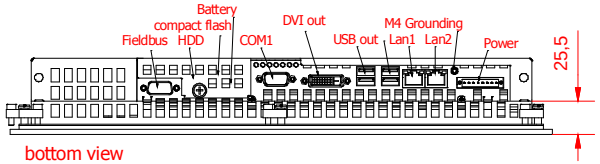

bottom view

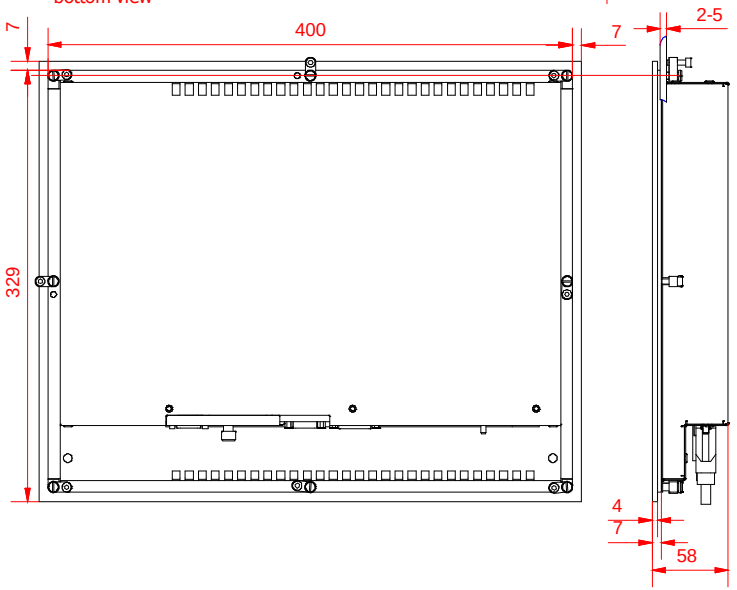

rear view

right view

dimensions in mm

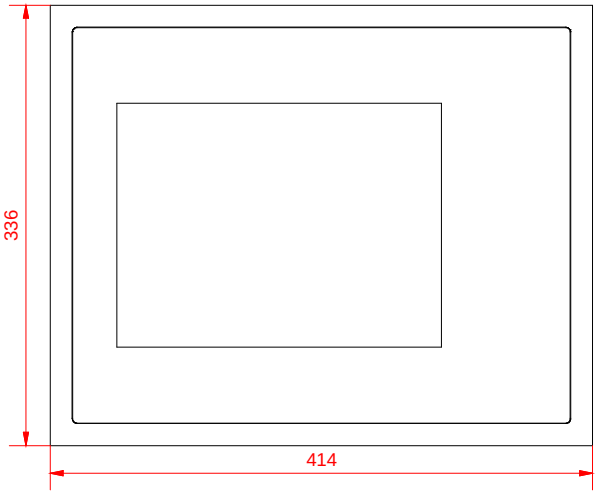
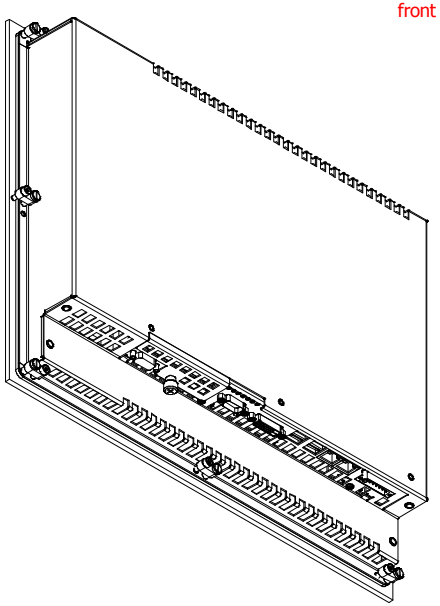
front view