CP7903-0011-M220
mounting arm adapter
for
Rittal
CP6521.000

main dimensions and
fixing points

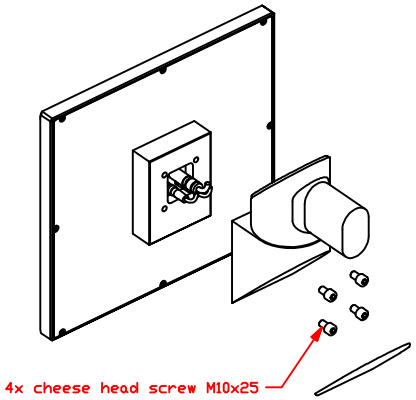

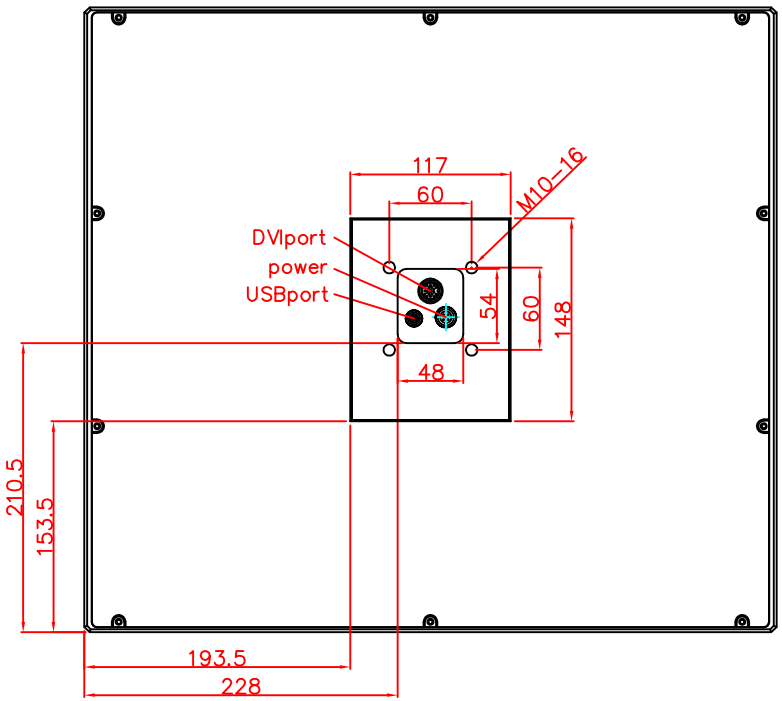

rear view

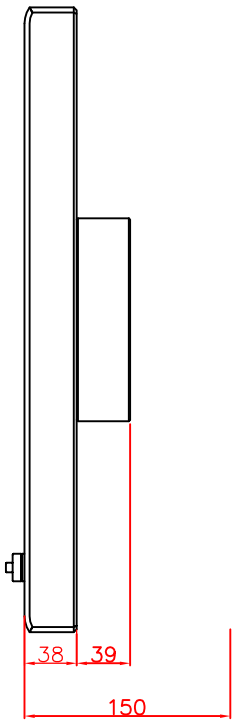

right view

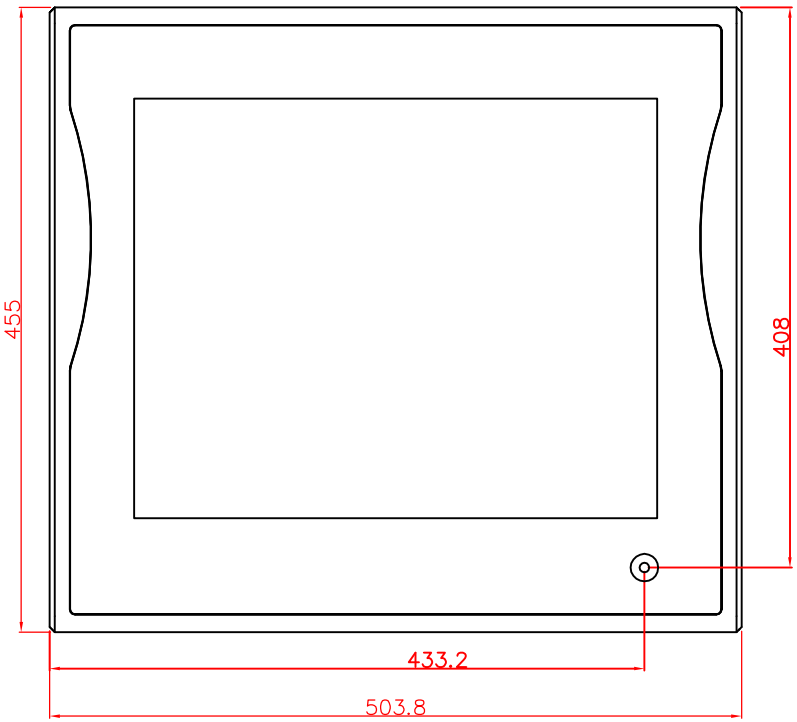

front view

dimensions in mm