BECKHOFF New Automation Technology

Manual | EN

MS6010-2100-2250

Power supply, 48 V DC/10 A, 600 V DC

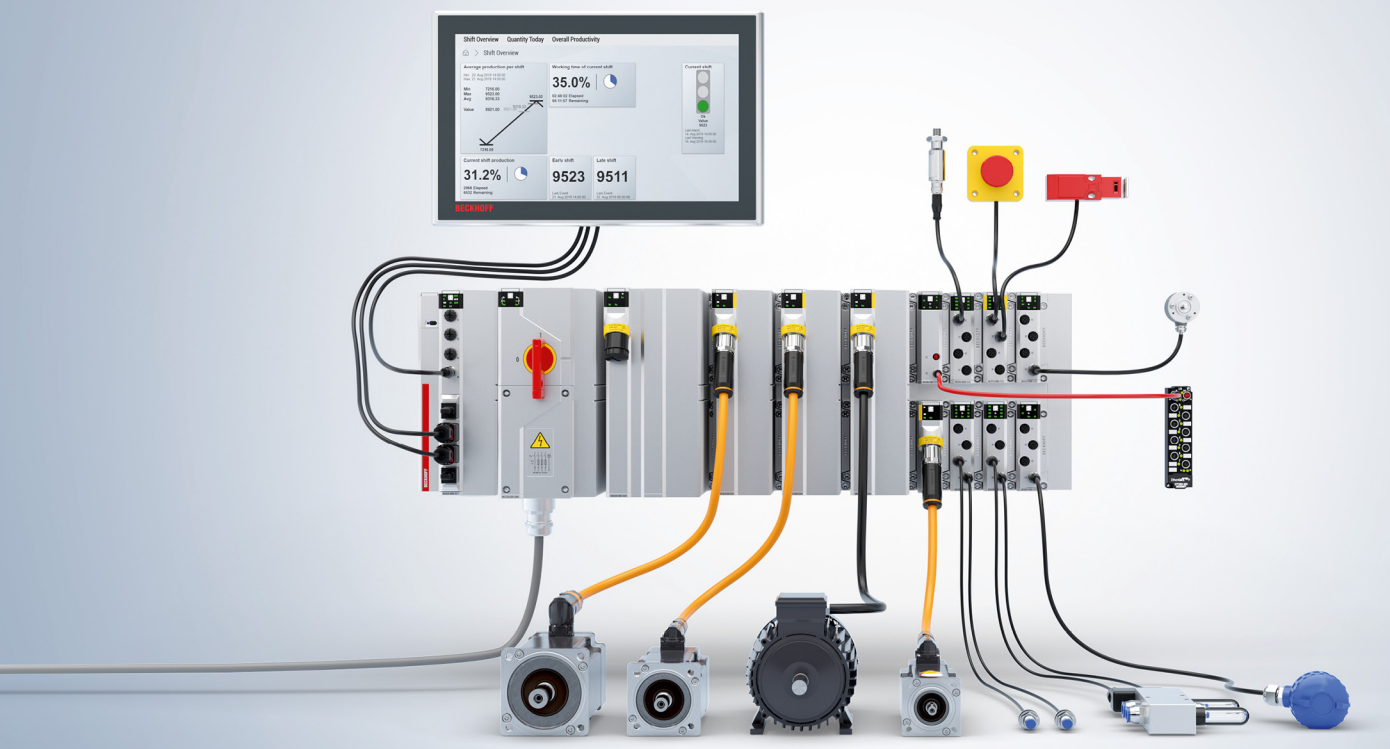

2026-05-20

Table of contents

1 Foreword ... 5
1.1 Notes on the documentation ... 5
1.2 For your safety ... 6
1.3 Intended use ... 7
2 Product overview ... 8
2.1 Product functions ... 10
2.2 Block diagram ... 11
2.3 Type key ... 12
2.4 Status display ... 13
2.5 Dimensions ... 14
3 Technical data ... 15
4 Software functions ... 17
5 Mechanical installation ... 18
5.1 Preparation ... 18
5.2 Placement of the module on the baseplate ... 19
5.3 Mounting the module ... 20
6 Connection ... 21
7 Commissioning and operation ... 22
7.1 Requirements ... 22
7.2 During operation ... 22
8 Decommissioning ... 23
8.1 Disassembly ... 23
8.2 Disposal ... 23
9 Appendix ... 24
9.1 Manual version history ... 24
9.2 Support and Service ... 25
9.3 Accessories ... 26

1 Foreword

1.1 Notes on the documentation

This description is intended exclusively for trained specialists in control and automation technology who are familiar with the applicable national standards.
The documentation and the following notes and explanations must be complied with when installing and commissioning the components.
The trained specialists must always use the current valid documentation.

The trained specialists must ensure that the application and use of the products described is in line with all safety requirements, including all relevant laws, regulations, guidelines, and standards.

Disclaimer

The documentation has been compiled with care. The products described are, however, constantly under development.
We reserve the right to revise and change the documentation at any time and without notice.
Claims to modify products that have already been supplied may not be made on the basis of the data, diagrams, and descriptions in this documentation.

Trademarks

Beckhoff®, ATRO®, EtherCAT®, EtherCAT G®, EtherCAT G10®, EtherCAT P®, MX-System®, Safety over EtherCAT®, TC/BSD®, TwinCAT®, TwinCAT/BSD®, TwinSAFE®, XFC®, XPlanar®, and XTS® are registered and licensed trademarks of Beckhoff Automation GmbH.
If third parties make use of the designations or trademarks contained in this publication for their own purposes, this could infringe upon the rights of the owners of the said designations.

EtherCAT® is a registered trademark and patented technology, licensed by Beckhoff Automation GmbH, Germany.

Copyright

© Beckhoff Automation GmbH & Co. KG, Germany.
The distribution and reproduction of this document, as well as the use and communication of its contents without express authorization, are prohibited.
Offenders will be held liable for the payment of damages. All rights reserved in the event that a patent, utility model, or design are registered.

Third-party trademarks

Trademarks of third parties may be used in this documentation. You can find the trademark notices here: https://www.beckhoff.com/trademarks.

1.2 For your safety

Safety regulations

Read the following explanations for your safety.
Always observe and follow product-specific safety instructions, which you may find at the appropriate places in this document.

Exclusion of liability

All the components are supplied in particular hardware and software configurations which are appropriate for the application. Modifications to hardware or software configurations other than those described in the documentation are not permitted, and nullify the liability of Beckhoff Automation GmbH & Co. KG.

Personnel qualification

This description is only intended for trained specialists in control, automation, and drive technology who are familiar with the applicable national standards.

Signal words

The signal words used in the documentation are classified below. In order to prevent injury and damage to persons and property, read and follow the safety and warning notices.

Personal injury warnings

⚠ DANGER
Hazard with high risk of death or serious injury.

⚠ WARNING
Hazard with medium risk of death or serious injury.

⚠ CAUTION
There is a low-risk hazard that could result in medium or minor injury.

Warning of damage to property or environment

NOTICE
The environment, equipment, or data may be damaged.

Information on handling the product

This information includes, for example:
recommendations for action, assistance or further information on the product.

1.3 Intended use

Intended use of an MX-System

Application in machines and systems in industrial environments and exclusively inside buildings.

The electrical wiring must be permanent wiring.

Improper use

Improper use is not permitted and will result in the exclusion of liability on the part of Beckhoff Automation GmbH & Co.

2 Product overview

The MS6010-2100-2250 power supply provides 48 V DC and up to 10 A for the system.

The internal power supply is fed with 600 V DC from the baseplate on the primary side. Other modules on the same baseplate can use the 48 V DC internally across all data slots or forward it to any external 48 V devices as required.

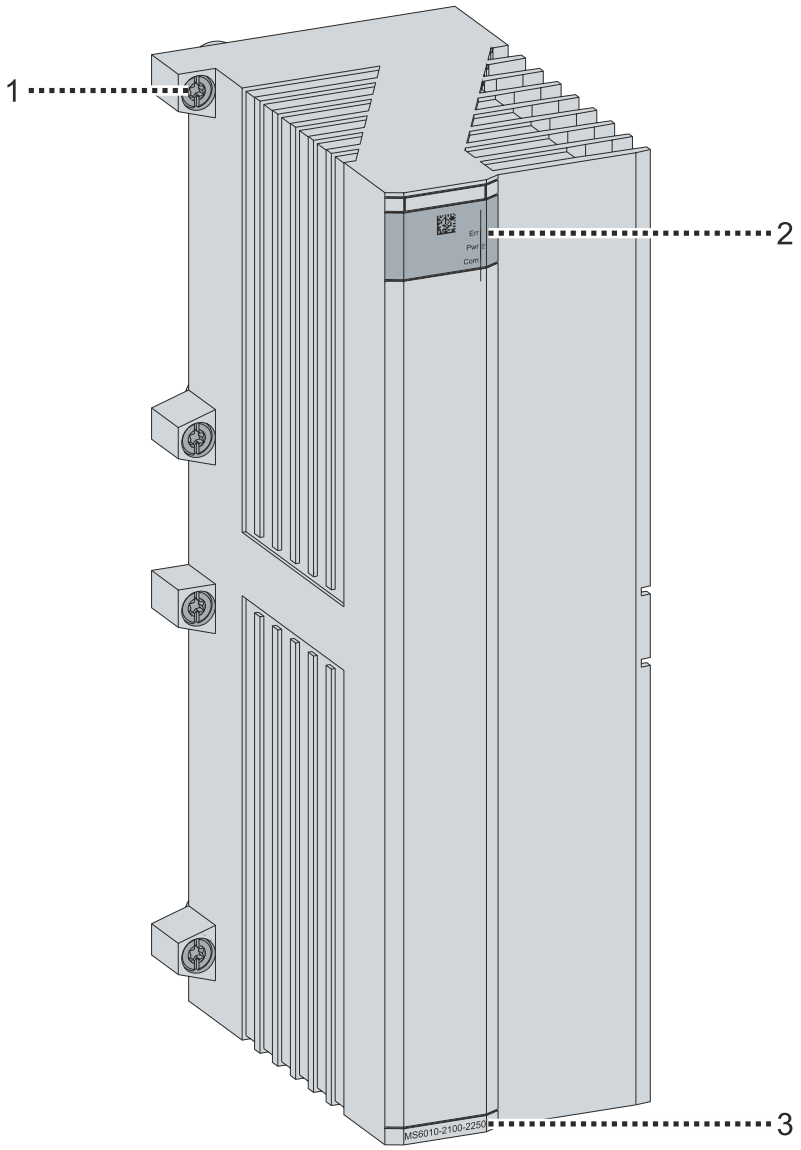

Position	Name
1	Fastening screw, captive, 8 x
2	Status display
3	Module name

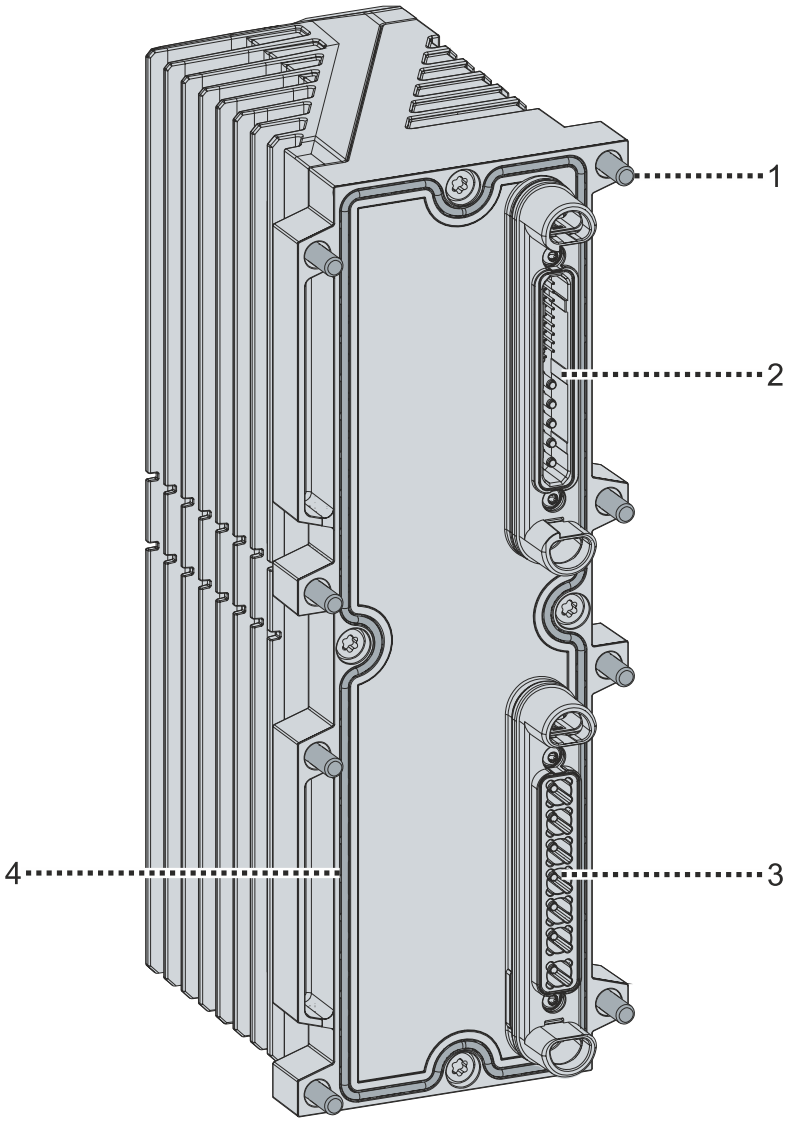

Position	Name
1	Fastening screw, captive, 8 x
2	Data connector
3	Power connector
4	Seal

2.1 Product functions

2.1.1 Power supply 48 V DC

The power supply generates a regulated output voltage of 48 V_{DC} and makes it available on the baseplate as the supply voltage U_B for other MX-System modules.

The power supply is protected against overload. An automatic overvoltage shutdown switches off the power supply if the output voltage becomes too high due to an internal error.

2.1.2 Parallel operation

NOTICE

Risk of overcurrent

Risk of defect.

- Ensure that the current carrying capacity of the baseplate is not exceeded.

You can operate two MS6010-2100-2250 units in parallel to increase the rated output current.

2.2 Block diagram

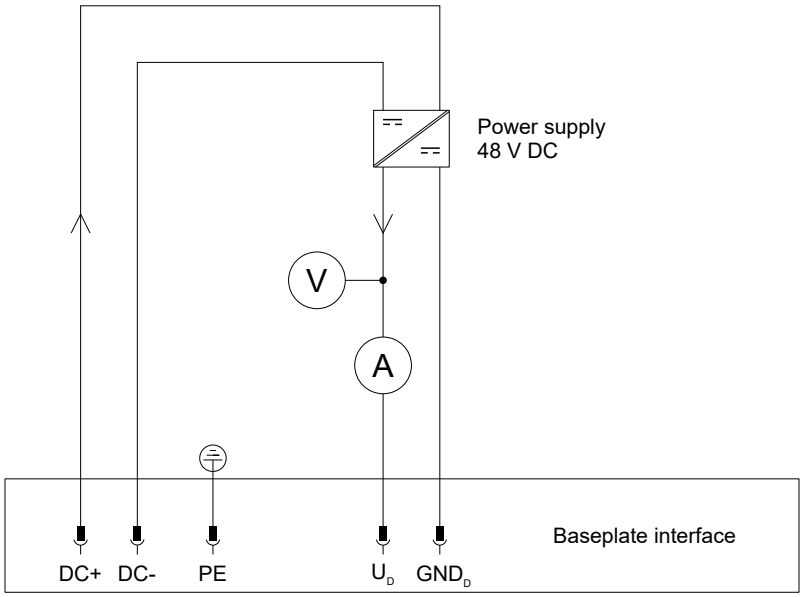

2.3 Type key

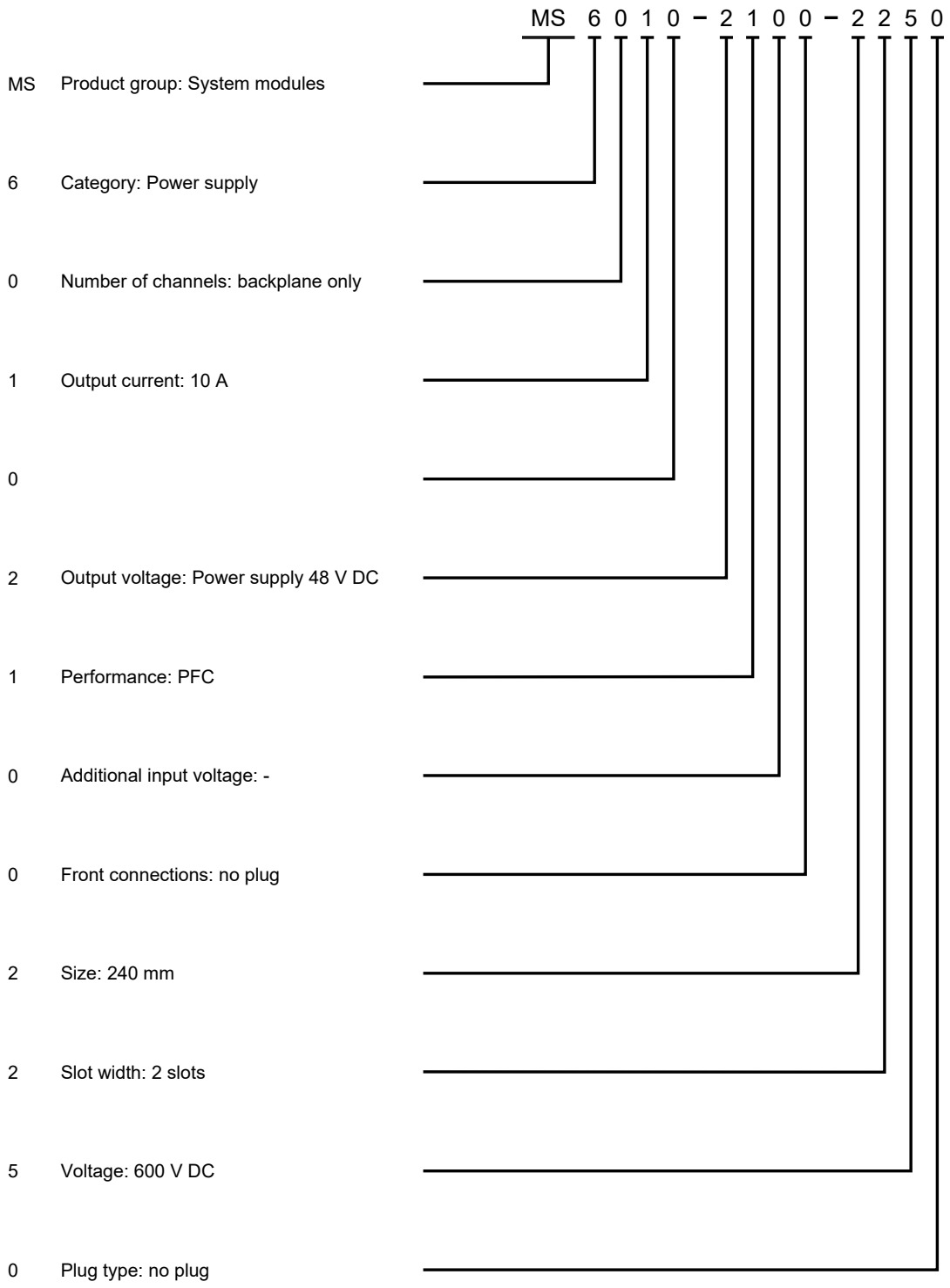
MS 6 0 1 0 – 2 1 0 0 – 2 2 5 0
MS Product group: System modules
6 Category: Power supply
0 Number of channels: backplane only
1 Output current: 10 A
0
2 Output voltage: Power supply 48 V DC
1 Performance: PFC
0 Additional input voltage: -
0 Front connections: no plug
2 Size: 240 mm
2 Slot width: 2 slots
5 Voltage: 600 V DC
0 Plug type: no plug

2.4 Status display

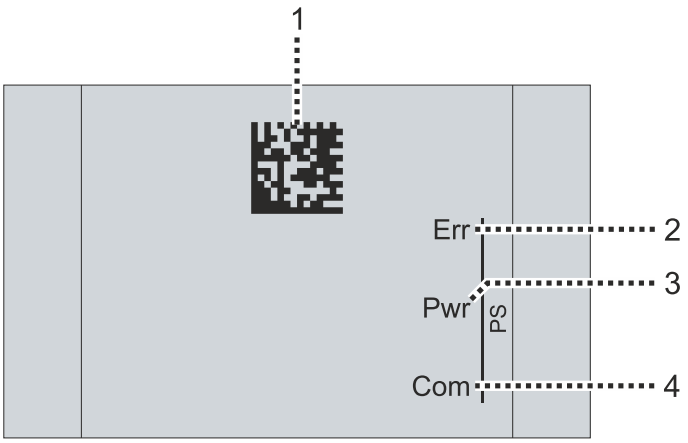

PS – Status display for the power supply

Position	Status display	Status	Explanation
1	-	-	Beckhoff Identification Code as Data Matrix code
2	Err	off	No error exists
		red illuminated	Error collection LED
3	Pwr	off	No 24 V DC output voltage available
		green illuminated	24 V DC output voltage available
4	Com	off	The EtherCAT State Machine of the module is in the initialization state
		flashing green	The EtherCAT State Machine of the module is in the *Pre-Operational* state
		single flash green	The EtherCAT State Machine of the module is in the *Safe-Operational* state
		green illuminated	The EtherCAT State Machine of the module is in the *Operational* state
		flickers green	Firmware is being loaded

2.5 Dimensions

All dimensions in mm

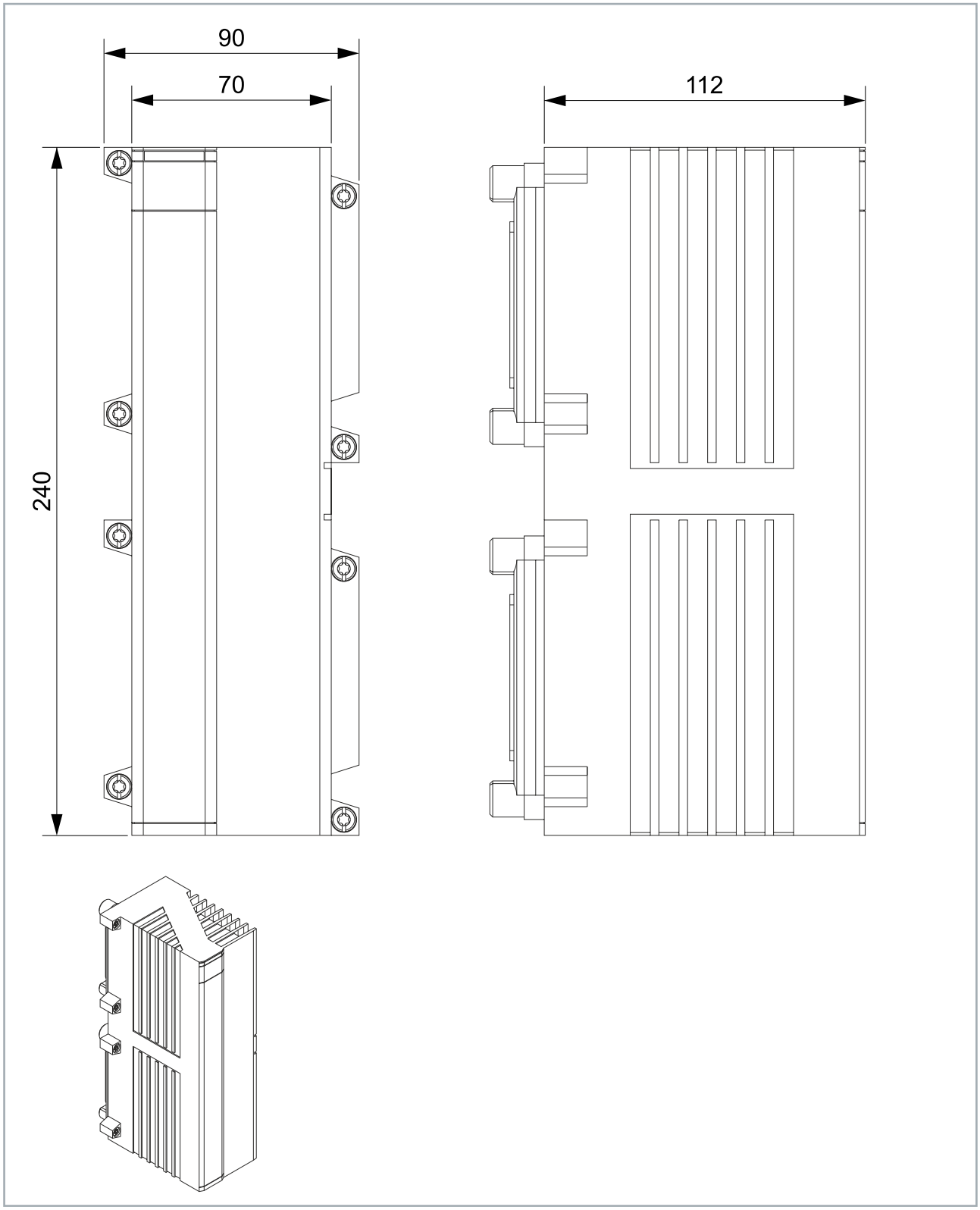

3 Technical data

Baseplate interface	
Connector	1 data connector 1 power connector
Fieldbus	EtherCAT

Power supply	
Input voltage range V_{In}	DC+ against DC-: 450...750 V DC (symmetrical around PE) DC+/DC- against PE: 225...375 V DC (< 424 V DC)
Output voltage V_{Out}	48 V DC in the factory setting. Adjustable up to 54 V DC.
Overvoltage limitation	60 V DC (max.)
Rated output current I_{Rated}	10 A for V_{Out} = 48 V DC
	8.6 A for V_{Out} = 54 V DC
Maximum output current I_{Max}	15 A for V_{Out} = 48 V DC
	13.3 A for V_{Out} = 54 V DC
Short-circuit current	17 A
Output type	PELV
Parallel operation	permissible, max. 2 modules
Input current I_{In}	for V_{Out} = 48 V DC and I_{Out} = I_{Rated} V_{In} = 600 V DC: I_{In} = 0.84 A V_{In} = 750 V DC: I_{In} = 0.67 A
Inrush current I_{In} (without current flow in filter capacitors)	for V_{Out} = 48 V DC and I_{Out} = I_{Rated}
Efficiency η	for V_{Out} = 48 V DC and I_{Out} = I_{Rated} V_{In} = 600 V DC: η = 95.1 % V_{In} = 750 V DC: η = 94.6 %
Power loss P_{Loss}	for V_{Out} = 48 V DC and I_{Out} = I_{Rated} V_{In} = 600 V DC: P_{Loss} = 22.5 W V_{In} = 750 V DC: P_{Loss} = 21.5 W
Hold-up time	for V_{Out} = 48 V DC and I_{Out} = I_{Rated} t = 20 ms
Output decoupling for redundancy	No
Feeding back into the output	permissible up to max. 60 V DC (overvoltage limitation can trigger beforehand)
Output capacitance	2300 µF

Housing data	
Width (slots)	2
Height (rows)	2
Dimensions W × H × D	90 mm × 240 mm × 112 mm
Material	Zinc die-cast and aluminum die-cast
Cooling	Convection
Weight	-
Installation position	Vertical. See system manual, chapter "Installation conditions".

Environmental conditions	
Operating temperature	0 … 50 °C
Storage temperature	-25 … +60 °C
Air humidity	95 %, no condensation
Protection rating	IP20 as a separate module
	IP65 / IP67 as part of a fully and correctly assembled MX-System
Pollution degree	2
Overvoltage category	III
Maximum installation altitude	2000 m

Device safety	
Separation between input and output	Double or reinforced electrical isolation
Protection class	I

Standards, approvals	
Device safety	conforms to EN 61010-2-201
EMC immunity/emission	conforms to EN IEC 61000-6-2 / EN IEC 61000-6-4
Vibration/shock resistance	conforms to EN 60068-2-6 / EN 60068-2-27
Approvals	CE, UL in preparation

All values are typical values over the entire temperature range, unless stated otherwise.

4 Software functions

PDOs

The process data objects (PDOs) can be displayed in TwinCAT for each module.

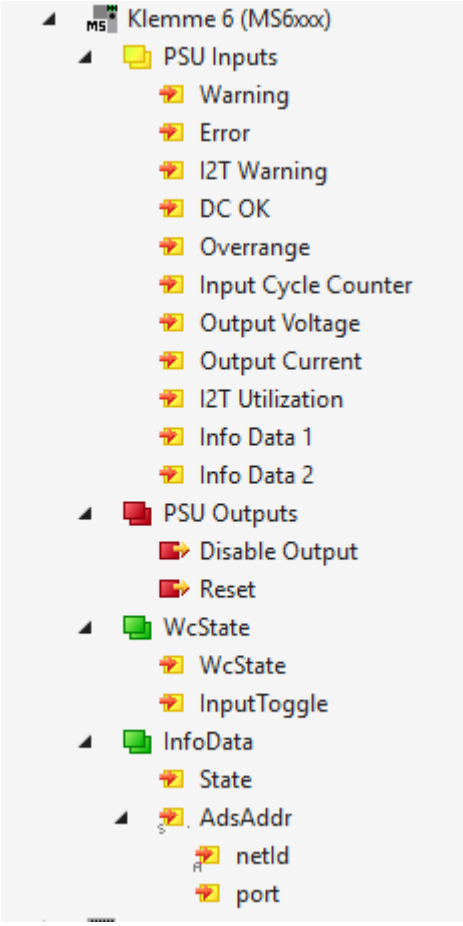

5 Mechanical installation

Required tools

- Torx T25 screwdriver
- Torque wrench 5 Nm

5.1 Preparation

NOTICE

Check the module for damage

If the seal is worn or damaged, liquids and dirt can penetrate and damage the MX-System. The IP65/IP67 protection rating is not met if the seals are worn or damaged.

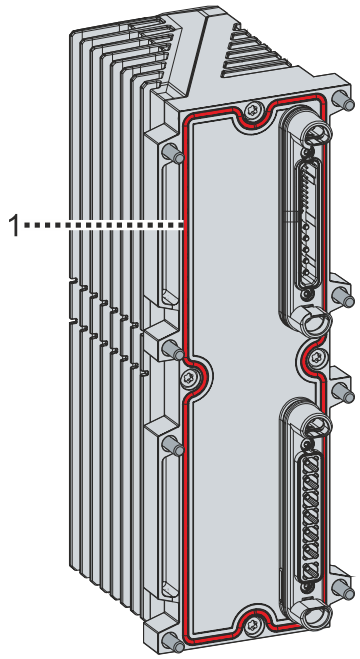

1. Check the seal [1] of the module for wear and damage
2. Replace worn and damaged seals

5.2 Placement of the module on the baseplate

The module can be plugged into the following areas marked in green:

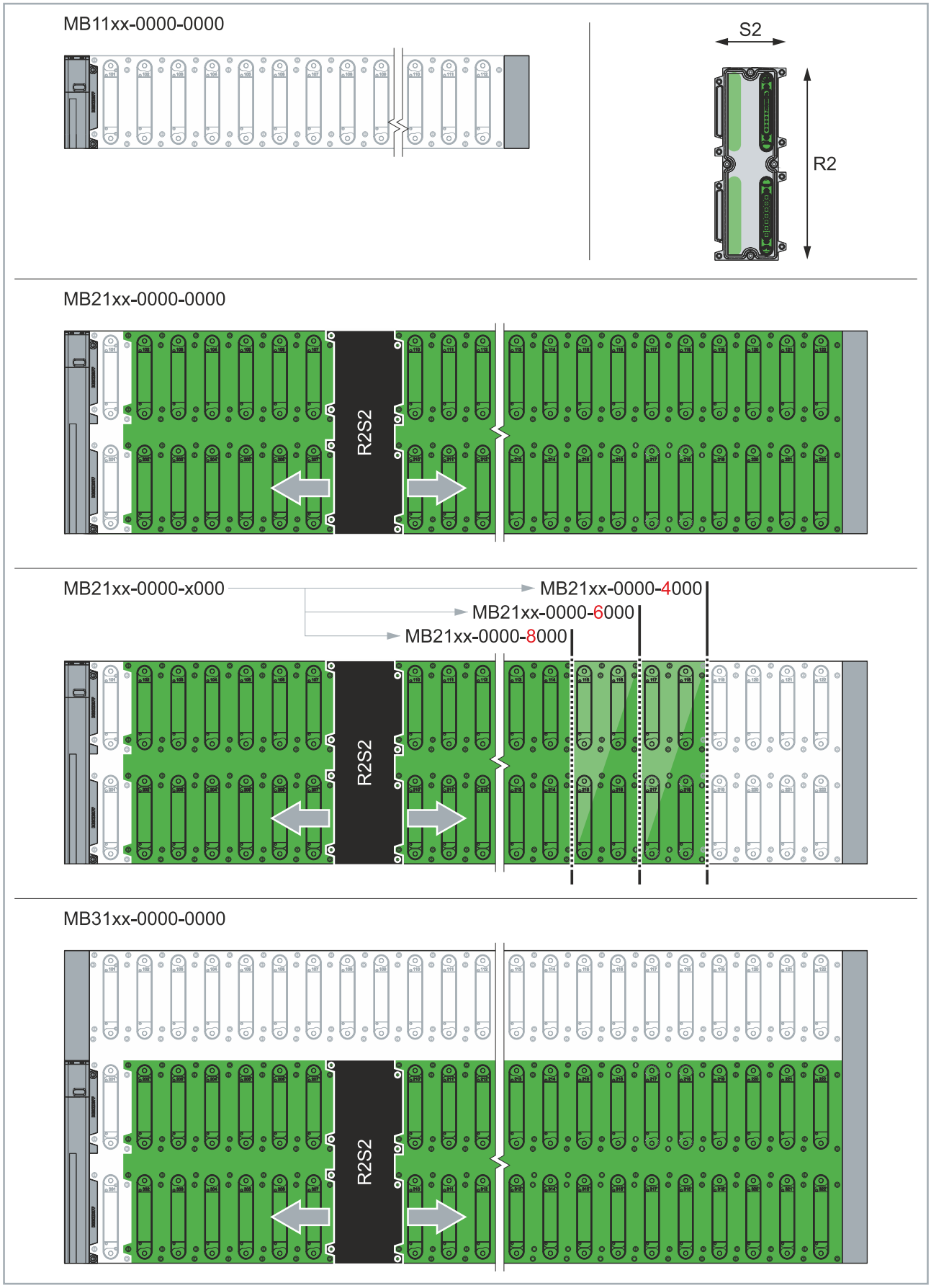

5.3 Mounting the module

⚠ CAUTION

Danger due to the high weight of an equipped baseplate

First mount the baseplate and then the modules to the baseplate. If you mount the modules on the baseplate first, the total weight of the MX-System will increase. Another person is required to transport and assemble an equipped baseplate.

- Wear personal protective equipment.
- The equipped baseplate must be transported and mounted by two people.

NOTICE

Ensure correct installation

If the module is not installed correctly, liquids and dirt may enter and damage the MX-System. The IP65/IP67 protection rating is not met if the installation is incorrect.

NOTICE

Limited number of mating cycles

The module may be plugged in a maximum of 25 times to attach it to the baseplate. If the module is plugged into the baseplate more than 25 times, a secure connection between the module and the baseplate cannot be guaranteed.

- Observe the permissible number of mating cycles.
- Replace the module if the number of mating cycles is exceeded.
- Replace the baseplate if the number of mating cycles is exceeded.

1. Plug the module on the baseplate
2. Tighten all screws
3. Observe tightening torques:

Components	Tightening torque [Nm]
Screws	5

Further information on installation can be found in the system manual in the "Mounting" chapter.

6 Connection

The module has no connections on the front.

7 Commissioning and operation

⚠ WARNING

Danger to life due to electric shock

After switching on, a life-threatening voltage may be present at open connectors.

- Before switching on, make sure that all components supplied with power voltage are fully and properly installed and correctly wired.
- Before switching on, ensure that unused connectors and other connections are covered with the sealing caps, dummy caps or protective caps provided for this purpose.

NOTICE

Damage to property due to operation in an unsuitable environment

Before commissioning, ensure that the environmental conditions at the place of commissioning and operation are complied with at all times.

1. Plug the module into a baseplate.
2. Screw the module onto the baseplate.
3. Wire the module.
4. Switch on the external supply voltage.

7.1 Requirements

- Components show no signs of damage
- Screw connections of the components are correctly tightened

7.2 During operation

- Observe information for environment and operation
- Observe maintenance intervals
- Switch off the system if
  - unusual noise occurs
  - smoke develops
  - an atypical temperature development occurs

8 Decommissioning

8.1 Disassembly

⚠ WARNING

Danger to life due to electric shock

After disconnecting from the supply voltage, a life-threatening voltage is still present at the contacts of the DC link voltage. Touching the contacts can lead to death or injury from electric shock.

- After disconnecting from the supply network, wait 10 minutes before starting disassembly.

Disassembly may only be carried out by qualified and trained technical personnel.

✓ The supply voltage is shut down.

1. Remove cables.
2. Loosen all mounting screws of the module.
3. Take the module off the baseplate.

⇨ The module has been removed correctly.

8.2 Disposal

Products marked with a crossed-out wheeled bin shall not be discarded with the normal waste stream. The device is considered as waste electrical and electronic equipment. The national regulations for the disposal of waste electrical and electronic equipment must be observed.

9 Appendix

9.1 Manual version history

The following table shows the version history of this manual.

Version	Comment
1.0	• First release

9.2 Support and Service

Beckhoff and their partners around the world offer comprehensive support and service, making available fast and competent assistance with all questions related to Beckhoff products and system solutions.

Download finder

Our download finder contains all the files that we offer you for downloading. You will find application reports, technical documentation, technical drawings, configuration files and much more.

The downloads are available in various formats.

Beckhoff's branch offices and representatives

Please contact your Beckhoff branch office or representative for local support and service on Beckhoff products!

The addresses of Beckhoff's branch offices and representatives round the world can be found on our internet page: www.beckhoff.com

You will also find further documentation for Beckhoff components there.

Beckhoff Support

Support offers you comprehensive technical assistance, helping you not only with the application of individual Beckhoff products, but also with other, wide-ranging services:

- support
- design, programming and commissioning of complex automation systems
- and extensive training program for Beckhoff system components

Hotline:	+49 5246 963-157
e-mail:	support@beckhoff.com

Beckhoff Service

The Beckhoff Service Center supports you in all matters of after-sales service:

- on-site service
- repair service
- spare parts service
- hotline service

Hotline:	+49 5246 963-460
e-mail:	service@beckhoff.com

Beckhoff Headquarters

Beckhoff Automation GmbH & Co. KG

Huelshorstweg 20
33415 Verl
Germany

Phone:	+49 5246 963-0
e-mail:	info@beckhoff.com
web:	www.beckhoff.com

9.3 Accessories

Suitable accessories can be found on the product website:

www.beckhoff.com/ms6010-2100-2250

The following items are also available for replacing worn parts:

MX seal S2R2

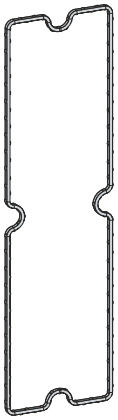

The S2R2 seal is available to replace worn and damaged seals on a 2-row MX module with two slots.

Trademark statements

Beckhoff®, ATRO®, EtherCAT®, EtherCAT G®, EtherCAT G10®, EtherCAT P®, MX-System®, Safety over EtherCAT®, TC/BSD®, TwinCAT®, TwinCAT/BSD®, TwinSAFE®, XFC®, XPlanar® and XTS® are registered and licensed trademarks of Beckhoff Automation GmbH.

More Information:
www.beckhoff.com/ms6010-2100-2250

Beckhoff Automation GmbH & Co. KG
Hülshorstweg 20
33415 Verl
Germany
Phone: +49 5246 9630
info@beckhoff.com
www.beckhoff.com