BECKHOFF New Automation Technology

Manual | EN

MS3004-4004-1112

4-channel power output, 24 V DC/1...4 A switchable, adjustable, M12

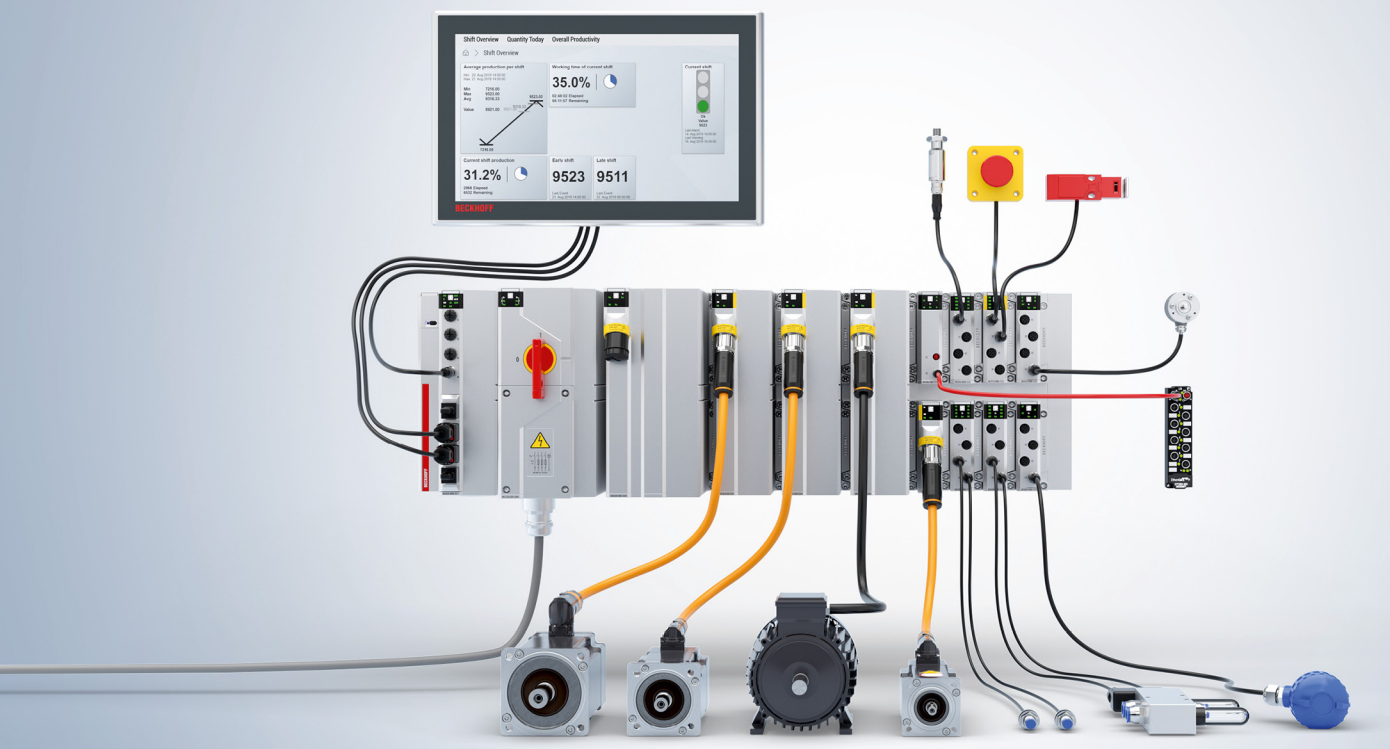

2026-05-20 | Version: 1.0.0

Table of contents

1 Foreword ... 5
1.1 Notes on the documentation ... 5
1.2 For your safety ... 6
1.3 Intended use ... 7
1.4 Safety sign ... 7
2 Product overview ... 8
2.1 Product functions ... 10
2.2 Block diagram ... 11
2.3 Type key ... 12
2.4 Status display ... 13
2.5 Dimensions ... 14
3 Technical data ... 15
4 Software functions ... 16
5 Mechanical installation ... 17
5.1 Preparation ... 17
5.2 Placement of the module on the baseplate ... 18
5.3 Mounting the module ... 19
6 Connection ... 20
7 Commissioning and operation ... 21
8 Decommissioning ... 22
8.1 Disassembly ... 22
8.2 Disposal ... 22
9 Appendix ... 23
9.1 Manual version history ... 23
9.2 Support and Service ... 24
9.3 Accessories ... 25

1 Foreword

1.1 Notes on the documentation

This description is intended exclusively for trained specialists in control and automation technology who are familiar with the applicable national standards.
The documentation and the following notes and explanations must be complied with when installing and commissioning the components.
The trained specialists must always use the current valid documentation.

The trained specialists must ensure that the application and use of the products described is in line with all safety requirements, including all relevant laws, regulations, guidelines, and standards.

Disclaimer

The documentation has been compiled with care. The products described are, however, constantly under development.
We reserve the right to revise and change the documentation at any time and without notice.
Claims to modify products that have already been supplied may not be made on the basis of the data, diagrams, and descriptions in this documentation.

Trademarks

Beckhoff®, ATRO®, EtherCAT®, EtherCAT G®, EtherCAT G10®, EtherCAT P®, MX-System®, Safety over EtherCAT®, TC/BSD®, TwinCAT®, TwinCAT/BSD®, TwinSAFE®, XFC®, XPlanar®, and XTS® are registered and licensed trademarks of Beckhoff Automation GmbH.
If third parties make use of the designations or trademarks contained in this publication for their own purposes, this could infringe upon the rights of the owners of the said designations.

EtherCAT® is a registered trademark and patented technology, licensed by Beckhoff Automation GmbH, Germany.

Copyright

© Beckhoff Automation GmbH & Co. KG, Germany.
The distribution and reproduction of this document, as well as the use and communication of its contents without express authorization, are prohibited.
Offenders will be held liable for the payment of damages. All rights reserved in the event that a patent, utility model, or design are registered.

Third-party trademarks

Trademarks of third parties may be used in this documentation. You can find the trademark notices here: https://www.beckhoff.com/trademarks.

1.2 For your safety

Safety regulations

Read the following explanations for your safety.
Always observe and follow product-specific safety instructions, which you may find at the appropriate places in this document.

Exclusion of liability

All the components are supplied in particular hardware and software configurations which are appropriate for the application. Modifications to hardware or software configurations other than those described in the documentation are not permitted, and nullify the liability of Beckhoff Automation GmbH & Co. KG.

Personnel qualification

This description is only intended for trained specialists in control, automation, and drive technology who are familiar with the applicable national standards.

Signal words

The signal words used in the documentation are classified below. In order to prevent injury and damage to persons and property, read and follow the safety and warning notices.

Personal injury warnings

⚠ DANGER
Hazard with high risk of death or serious injury.

⚠ WARNING
Hazard with medium risk of death or serious injury.

⚠ CAUTION
There is a low-risk hazard that could result in medium or minor injury.

Warning of damage to property or environment

NOTICE
The environment, equipment, or data may be damaged.

Information on handling the product

This information includes, for example:
recommendations for action, assistance or further information on the product.

1.3 Intended use

Intended use of an MX-System

Application in machines and systems in industrial environments and exclusively inside buildings.

The electrical wiring must be permanent wiring.

Improper use

Improper use is not permitted and will result in the exclusion of liability on the part of Beckhoff Automation GmbH & Co.

1.4 Safety sign

You will find safety signs on Beckhoff products and packaging. These attached, printed, or laser-engraved safety signs may vary depending on the product. They serve to protect people and to prevent damage to the products. Safety signs must not be removed and must be legible to the user. Refer to the documentation whenever a symbol appears.

High voltage warning

There are areas of the device where dangerous electrical voltage is present. Contacting live electrical parts can result in serious injury or death. Work may only be performed in a de-energized state.

General warning sign

Observe the associated safety notes and instructions. Improper behavior can lead to injuries or property damage.

Fuse replacement

Switch off the supply voltage completely before replacing the fuses. Only use fuses of the same type and with identical nominal values. The device contains fuses that can be replaced if necessary. In the event of a fault, check the fuses and replace them if necessary.

Electronic components

Products marked with a crossed-out waste bin must not be disposed of with general waste. Electronic components and devices are considered as waste electrical and electronic equipment for disposal. Observe the national regulations for the disposal of old electrical and electronic equipment.

Fuse type

Observe the information on the number and type of replaceable fuses. Only use the specified fuse types for replacement.

Read the original operating instructions

Familiarize yourself with the entire content of the operating instructions before commissioning. Always read the general safety instructions and the warnings in the individual chapters.

2 Product overview

The MS3004-4004-1112 4-channel power output module provides 24 V DC per channel with up to 4 A. The channels can be switched individually and also offer the option to measure currents and parameterize the integrated electronic fuses in a range of 1…4 A in stages.

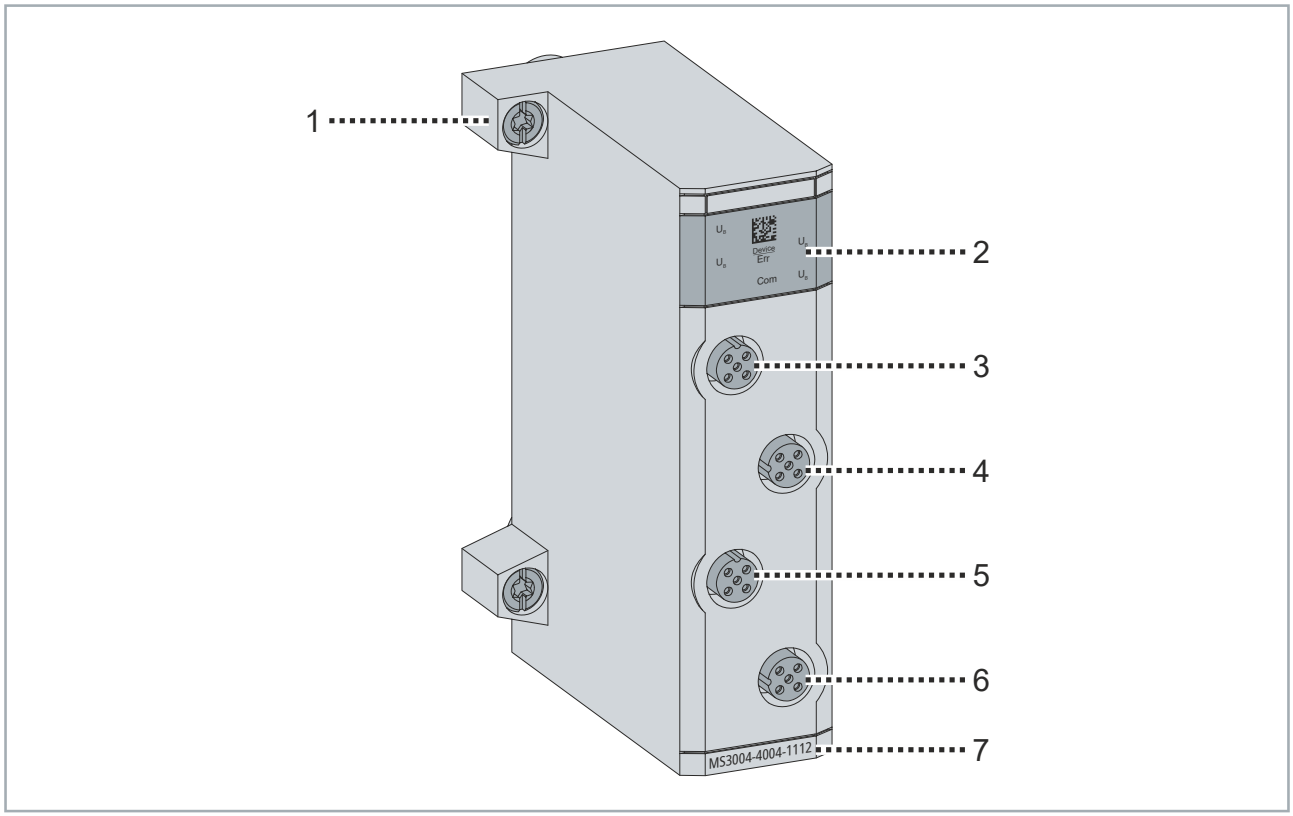

Position	Name
1	Fastening screw, captive, 8 x
2	Status display
3	Supply voltage output X1
4	Supply voltage output X2
5	Supply voltage output X3
6	Supply voltage output X4
7	Module name

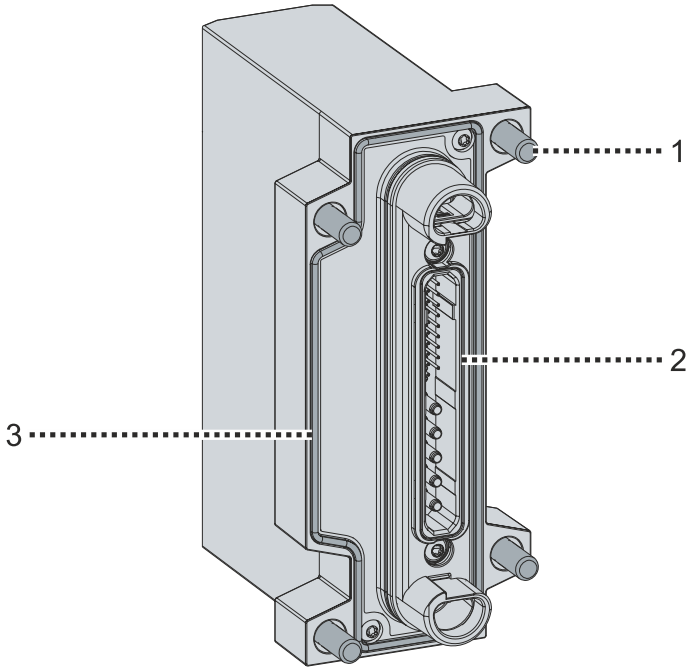

Position	Name
1	Fastening screw, captive, 4 x
2	Data connector
3	Seal

2.1 Product functions

Supply voltage outputs

The supply voltage outputs each output 24 V DC at two contacts: U_S and U_P. The following applies to each output:

- There is one shared electronic fuse for both U_S and U_P combined.
- All output voltages are branched off from the baseplate voltage U_B.

A graphical representation of the current circuits can be found in the chapter Block diagram.

The current limits can be adjusted in four steps. The outputs can be switched via software functions.

2.2 Block diagram

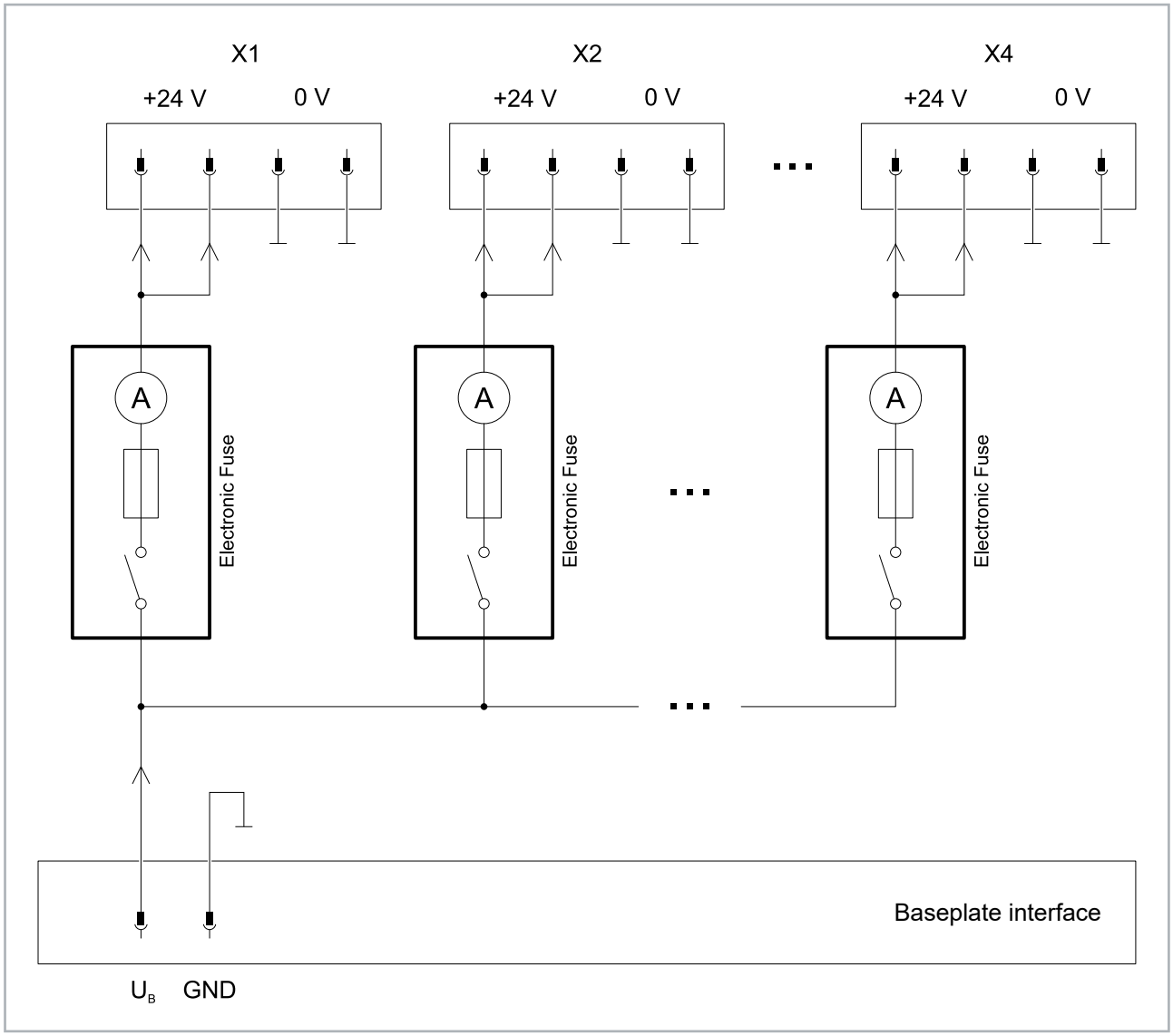

2.3 Type key

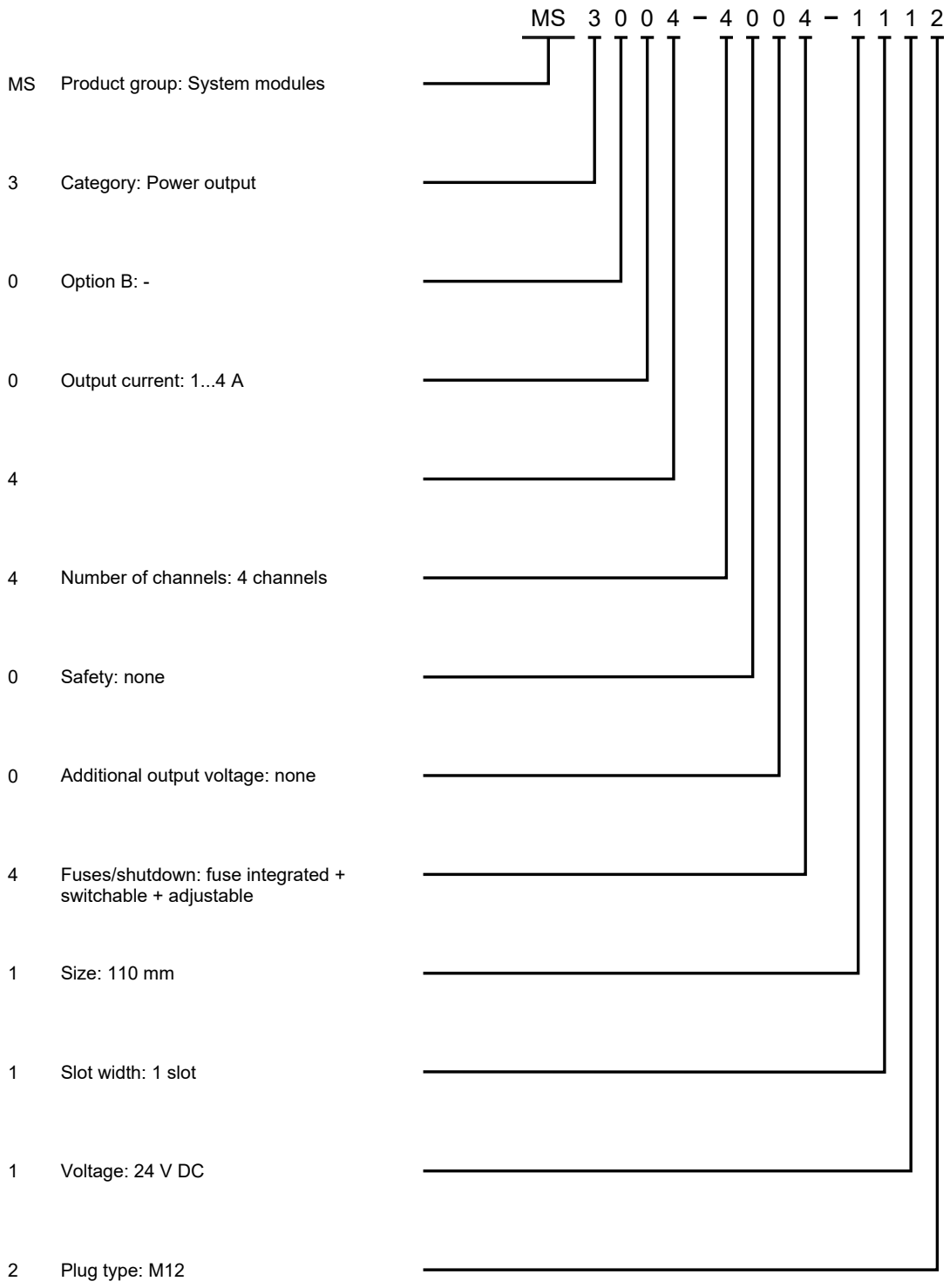
MS 3 0 0 4 – 4 0 0 4 – 1 1 1 2
MS Product group: System modules
3 Category: Power output
0 Option B: -
0 Output current: 1...4 A
4
4 Number of channels: 4 channels
0 Safety: none
0 Additional output voltage: none
4 Fuses/shutdown: fuse integrated + switchable + adjustable
1 Size: 110 mm
1 Slot width: 1 slot
1 Voltage: 24 V DC
2 Plug type: M12

2.4 Status display

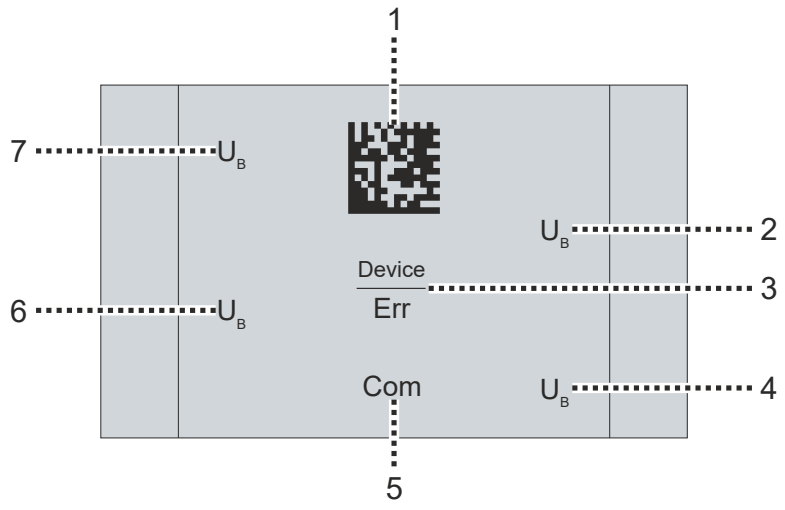

Position	Status display	Status	Explanation
1	-	-	Beckhoff Identification Code as Data Matrix code
2	U_B	off	No supply voltage present
		green illuminated	Supply voltage switched on
3	Device | Err	off	No errors present
		white illuminated	Collective error LED
4	U_B	off	No supply voltage present
		green illuminated	Supply voltage switched on
5	Com	off	The EtherCAT State Machine of the module is in the initialization state
		flashing green	The EtherCAT State Machine of the module is in the *Pre-Operational* state
		single flash green	The EtherCAT State Machine of the module is in the *Safe-Operational* state
		green illuminated	The EtherCAT State Machine of the module is in the *Operational* state
		flickers green	Firmware is being loaded
6	U_B	off	No supply voltage present
		green illuminated	Supply voltage switched on
7	U_B	off	No supply voltage present
		green illuminated	Supply voltage switched on

2.5 Dimensions

All dimensions in mm

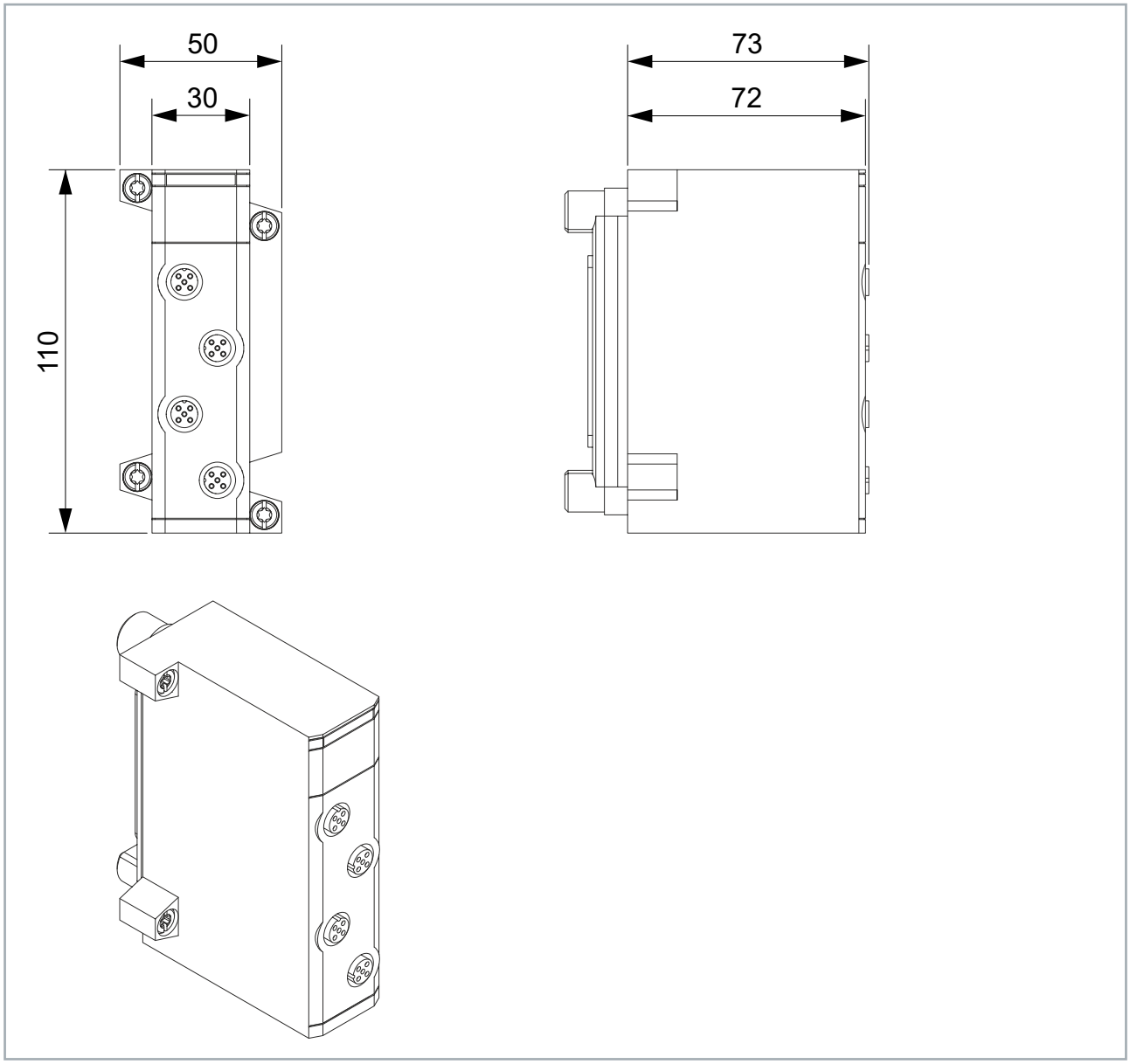

3 Technical data

All values are typical values over the entire temperature range, unless stated otherwise.

Baseplate interface	
Connector	1 data connector
Fieldbus	EtherCAT
Hot Swap	No

Supply voltage outputs	
Connection	4 x M12 socket, A-coded
Output voltages per connection	24 V DC U_S 24 V DC U_P
Rated output currents	Per connection: • U_S/U_P: 4 A combined
Output current limitation	Per connection: • U_S/U_P: max. 4.4 A combined Adjustable in CoE (Current Limit) Choice: (typical limitation) • 1 A: (1.2 A ± 8 %) • 2 A: (2.2 A ± 8 %) • 3 A: (3.3 A ± 8 %) • 4 A: (4.4 A ± 8 %)
Output power limitation	Per connection: • U_S/U_P: max. 100 W combined
Output current measuring range	Per connection: • U_S/U_P: 6 A

Housing data	
Width (slots)	1
Height (rows)	1
Dimensions W × H × D	50 mm × 110 mm × 73 mm 50 mm × 110 mm × 72 mm (housing only)
Material	Zinc die-cast and aluminum die-cast
Cooling	Convection
Weight	320 g
Installation position	Vertical. See system manual, chapter "Installation conditions".

4 Software functions

PDOs

The process data objects (PDOs) can be displayed in TwinCAT for each module.

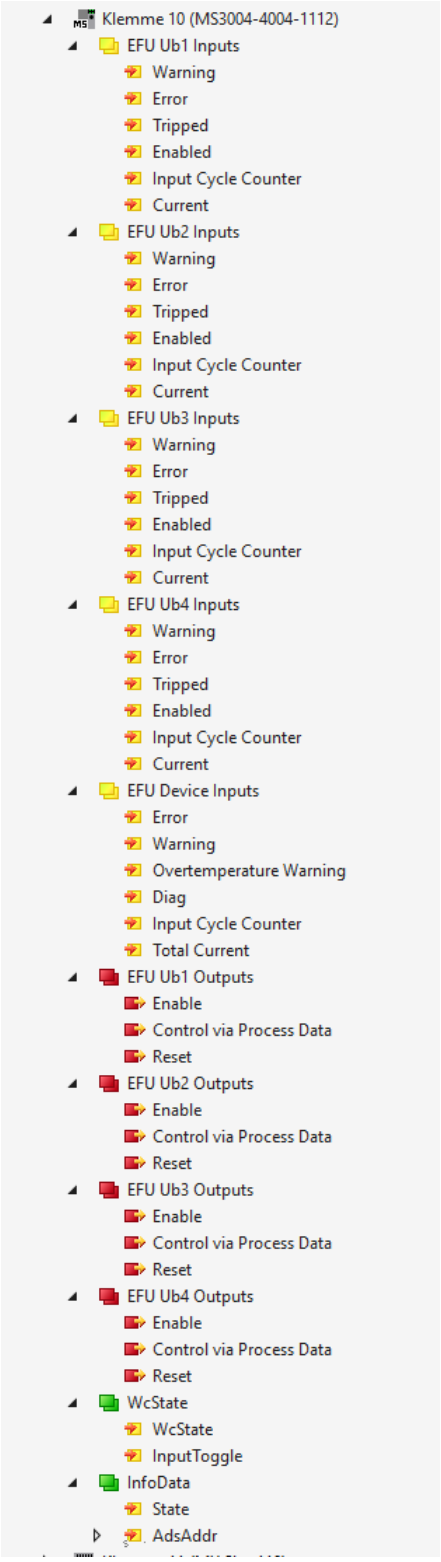

5 Mechanical installation

Required tools

- Torx T25 screwdriver
- Torque wrench 5 Nm

5.1 Preparation

NOTICE

Check the module for damage

If the seal is worn or damaged, liquids and dirt can penetrate and damage the MX-System. The IP65/IP67 protection rating is not met if the seals are worn or damaged.

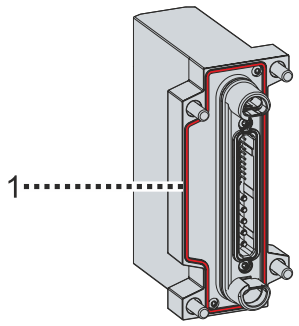

1. Check the seal [1] of the module for wear and damage
2. Replace worn and damaged seals

5.2 Placement of the module on the baseplate

The module can be plugged into the following areas marked in green:

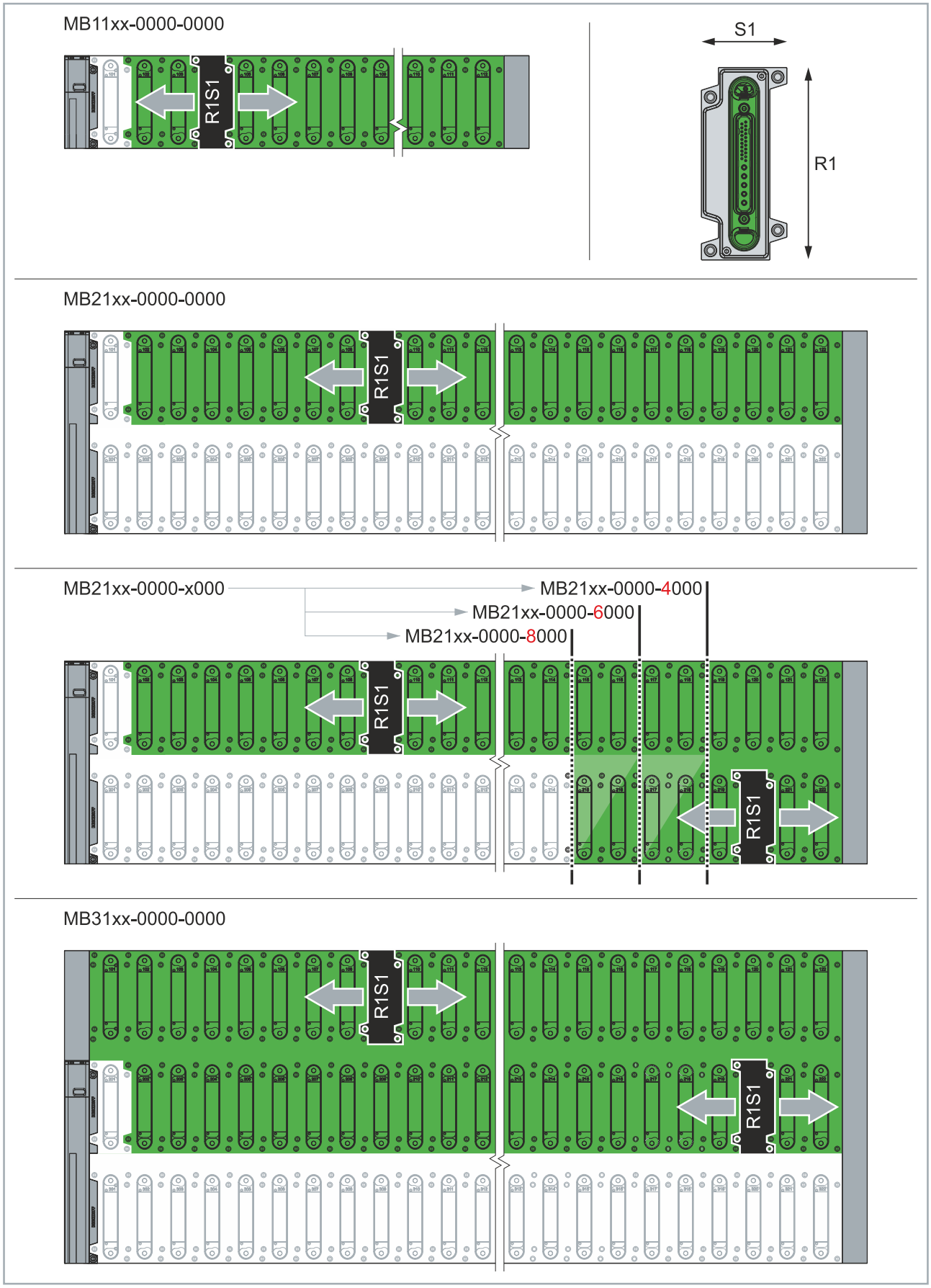

5.3 Mounting the module

⚠ CAUTION

Danger due to the high weight of an equipped baseplate

First mount the baseplate and then the modules to the baseplate. If you mount the modules on the baseplate first, the total weight of the MX-System will increase. Another person is required to transport and assemble an equipped baseplate.

- Wear personal protective equipment.
- The equipped baseplate must be transported and mounted by two people.

NOTICE

Ensure correct installation

If the module is not installed correctly, liquids and dirt may enter and damage the MX-System. The IP65/IP67 protection rating is not met if the installation is incorrect.

NOTICE

Limited number of mating cycles

The module may be plugged in a maximum of 25 times to attach it to the baseplate. If the module is plugged into the baseplate more than 25 times, a secure connection between the module and the baseplate cannot be guaranteed.

- Observe the permissible number of mating cycles.
- Replace the module if the number of mating cycles is exceeded.
- Replace the baseplate if the number of mating cycles is exceeded.

1. Plug the module on the baseplate
2. Tighten all screws
3. Observe tightening torques:

Components	Tightening torque [Nm]
Screws	5

Further information on installation can be found in the system manual in the "Mounting" chapter.

6 Connection

6.1 Power output

The power output is a 5-pin M12 socket (coding A).

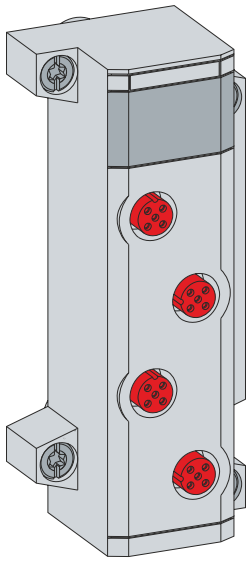

Pin assignment

M12 socket, A-coded	Pin	Signal	Function
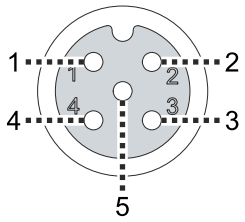	1	+24 V	U_B +
	2	+24 V	U_B +
	3	GND	U_B -
	4	GND	U_B -
	5	n. c.	-

7 Commissioning and operation

NOTICE

Damage to property due to operation in an unsuitable environment

Before commissioning, ensure that the environmental conditions at the place of commissioning and operation are complied with at all times.

1. Plug the module onto a baseplate.
2. Screw the module onto the baseplate.
3. Wire the module.
4. Switch on the external supply voltage.

8 Decommissioning

8.1 Disassembly

NOTICE

Damage to property due to electrical voltage

Disassembling this module under voltage can lead to material damage.

- Switch off the supply voltage before disassembling.

Disassembly may only be carried out by qualified and trained technical personnel.

✓ The supply voltage is shut down.

1. Remove cables.
2. Loosen all mounting screws of the module.
3. Take the module off the baseplate.

⇨ The module has been removed correctly.

8.2 Disposal

Products marked with a crossed-out wheeled bin shall not be discarded with the normal waste stream. The device is considered as waste electrical and electronic equipment. The national regulations for the disposal of waste electrical and electronic equipment must be observed.

9 Appendix

9.1 Manual version history

The following table shows the version history of this manual.

Version	Comment
1.0.0	• First release

9.2 Support and Service

Beckhoff and their partners around the world offer comprehensive support and service, making available fast and competent assistance with all questions related to Beckhoff products and system solutions.

Download finder

Our download finder contains all the files that we offer you for downloading. You will find application reports, technical documentation, technical drawings, configuration files and much more.

The downloads are available in various formats.

Beckhoff's branch offices and representatives

Please contact your Beckhoff branch office or representative for local support and service on Beckhoff products!

The addresses of Beckhoff's branch offices and representatives round the world can be found on our internet page: www.beckhoff.com

You will also find further documentation for Beckhoff components there.

Beckhoff Support

Support offers you comprehensive technical assistance, helping you not only with the application of individual Beckhoff products, but also with other, wide-ranging services:

- support
- design, programming and commissioning of complex automation systems
- and extensive training program for Beckhoff system components

Hotline:	+49 5246 963-157
e-mail:	support@beckhoff.com

Beckhoff Service

The Beckhoff Service Center supports you in all matters of after-sales service:

- on-site service
- repair service
- spare parts service
- hotline service

Hotline:	+49 5246 963-460
e-mail:	service@beckhoff.com

Beckhoff Headquarters

Beckhoff Automation GmbH & Co. KG

Huelshorstweg 20
33415 Verl
Germany

Phone:	+49 5246 963-0
e-mail:	info@beckhoff.com
web:	www.beckhoff.com

9.3 Accessories

Suitable accessories can be found on the product website:

www.beckhoff.com/ms3004-4004-1112

Product	Description
ZMX1000-0010	M5x17.5 combi-TX25 replacement screws for module fastening (PU = 10 pcs.)
ZMX3001-0012	1-row, 2-slot replacement seal for module base
ZMX4001-0001	Replacement cover for potential equalization for 1-row baseplate with Beckhoff logo
ZMX4001-0002	Replacement cover for potential equalization for 2- and 3-row baseplate with Beckhoff logo

The following items are also available for replacing worn parts:

MX module base S1R1 with seal

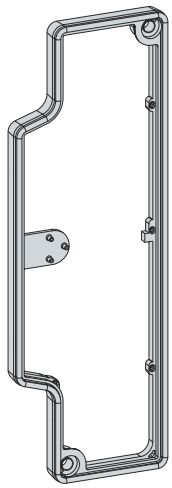

The module base S1R1 with seal is available for replacing worn and damaged seals on a 1-row MX module with one slot.

Trademark statements

Beckhoff®, ATRO®, EtherCAT®, EtherCAT G®, EtherCAT G10®, EtherCAT P®, MX-System®, Safety over EtherCAT®, TC/BSD®, TwinCAT®, TwinCAT/BSD®, TwinSAFE®, XFC®, XPlanar® and XTS® are registered and licensed trademarks of Beckhoff Automation GmbH.

More Information:
www.beckhoff.com/ms3004-4004-1112

Beckhoff Automation GmbH & Co. KG
Hülshorstweg 20
33415 Verl
Germany
Phone: +49 5246 9630
info@beckhoff.com
www.beckhoff.com