BECKHOFF New Automation Technology

Manual | EN

MS1332-2001-2349

Power infeed, black main switch, replaceable fuses, 400/480 V AC/32 A, 24 V DC/20 A power supply

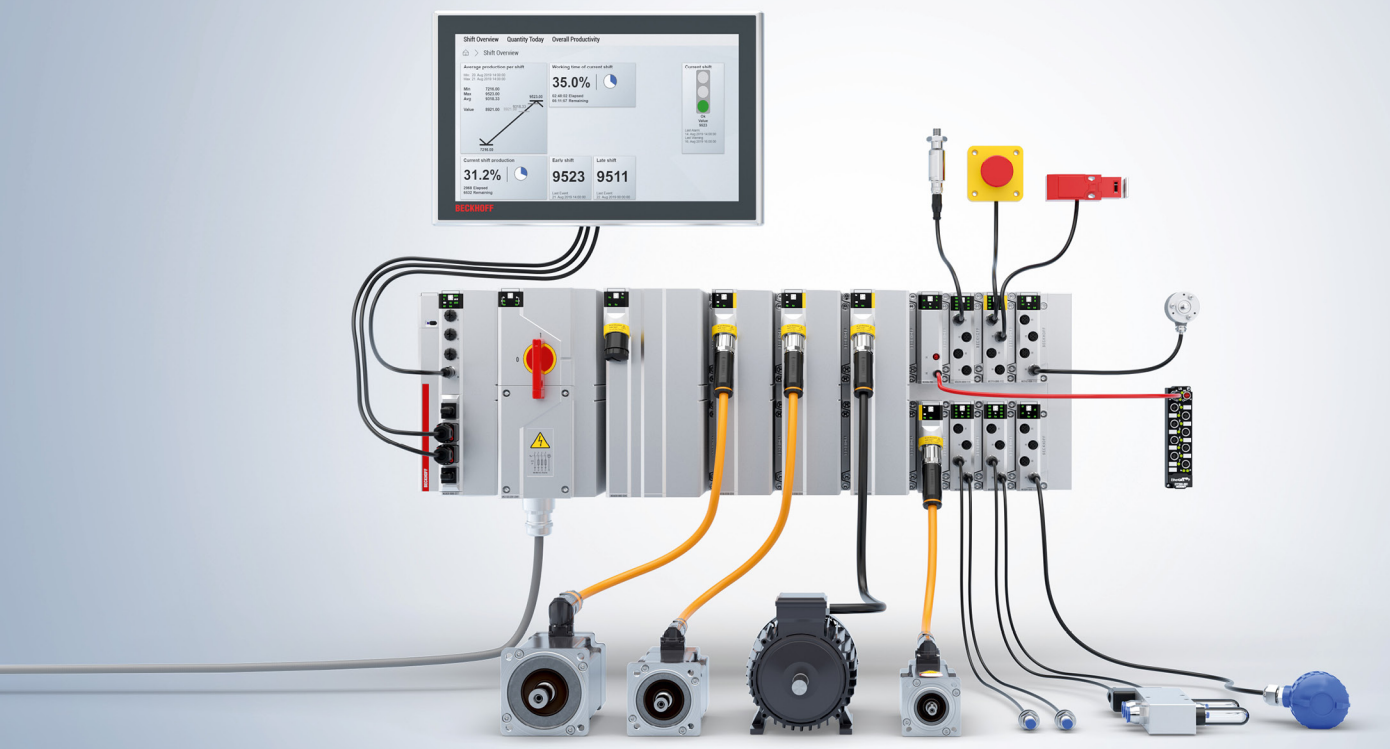

2026-05-20 | Version: 1.0

Table of contents

1 Foreword ... 5
1.1 Notes on the documentation ... 5
1.2 For your safety ... 6
1.3 Intended use ... 7
1.4 Safety instructions ... 7
1.5 Safety sign ... 7
2 Product overview ... 8
2.1 Product functions ... 10
2.2 Block diagram ... 11
2.3 Type key ... 12
2.4 Status display ... 13
2.5 Dimensions ... 14
3 Technical data ... 15
4 Software functions ... 18
4.1 Process Data Objects (PDOs) ... 18
5 Mechanical installation ... 19
5.1 Preparation ... 19
5.2 Placement of the module on the baseplate ... 20
5.3 Mounting the module ... 21
6 Connection ... 22
6.1 Connecting the power cable ... 22
7 Commissioning and operation ... 29
7.1 During operation ... 29
7.1.1 Secure the main switch to prevent accidental activation ... 29
7.2 Replacing the fuses ... 31
8 Decommissioning ... 35
8.1 Disassembly ... 35
8.2 Disposal ... 35
9 Appendix ... 36
9.1 Manual version history ... 36
9.2 Support and Service ... 37
9.3 Accessories ... 38

1 Foreword

1.1 Notes on the documentation

This description is intended exclusively for trained specialists in control and automation technology who are familiar with the applicable national standards.
The documentation and the following notes and explanations must be complied with when installing and commissioning the components.
The trained specialists must always use the current valid documentation.

The trained specialists must ensure that the application and use of the products described is in line with all safety requirements, including all relevant laws, regulations, guidelines, and standards.

Disclaimer

The documentation has been compiled with care. The products described are, however, constantly under development.
We reserve the right to revise and change the documentation at any time and without notice.
Claims to modify products that have already been supplied may not be made on the basis of the data, diagrams, and descriptions in this documentation.

Trademarks

Beckhoff®, ATRO®, EtherCAT®, EtherCAT G®, EtherCAT G10®, EtherCAT P®, MX-System®, Safety over EtherCAT®, TC/BSD®, TwinCAT®, TwinCAT/BSD®, TwinSAFE®, XFC®, XPlanar®, and XTS® are registered and licensed trademarks of Beckhoff Automation GmbH.
If third parties make use of the designations or trademarks contained in this publication for their own purposes, this could infringe upon the rights of the owners of the said designations.

EtherCAT® is a registered trademark and patented technology, licensed by Beckhoff Automation GmbH, Germany.

Copyright

© Beckhoff Automation GmbH & Co. KG, Germany.
The distribution and reproduction of this document, as well as the use and communication of its contents without express authorization, are prohibited.
Offenders will be held liable for the payment of damages. All rights reserved in the event that a patent, utility model, or design are registered.

Third-party trademarks

Trademarks of third parties may be used in this documentation. You can find the trademark notices here: https://www.beckhoff.com/trademarks.

1.2 For your safety

Safety regulations

Read the following explanations for your safety.
Always observe and follow product-specific safety instructions, which you may find at the appropriate places in this document.

Exclusion of liability

All the components are supplied in particular hardware and software configurations which are appropriate for the application. Modifications to hardware or software configurations other than those described in the documentation are not permitted, and nullify the liability of Beckhoff Automation GmbH & Co. KG.

Personnel qualification

This description is only intended for trained specialists in control, automation, and drive technology who are familiar with the applicable national standards.

Signal words

The signal words used in the documentation are classified below. In order to prevent injury and damage to persons and property, read and follow the safety and warning notices.

Personal injury warnings

⚠ DANGER
Hazard with high risk of death or serious injury.

⚠ WARNING
Hazard with medium risk of death or serious injury.

⚠ CAUTION
There is a low-risk hazard that could result in medium or minor injury.

Warning of damage to property or environment

NOTICE
The environment, equipment, or data may be damaged.

Information on handling the product

This information includes, for example:
recommendations for action, assistance or further information on the product.

1.3 Intended use

The MS1332-2001-2349 is designed to feed an external supply voltage into the MX-System. It may only be operated if it is mounted on a baseplate in accordance with the mounting instructions in this manual and the terminal box is closed.

With the exception of the terminal box, the housing must not be opened by the user. There are no user-serviceable parts inside the housing. The housing screws on the bottom of the module may only be released by Beckhoff Service.

Intended use of an MX-System

Application in machines and systems in industrial environments and exclusively inside buildings.

The electrical wiring must be permanent wiring.

Improper use

Improper use is not permitted and will result in the exclusion of liability on the part of Beckhoff Automation GmbH & Co.

1.4 Safety instructions

This module works with a life-threatening voltage. Work on the module may only be carried out in a de-energized state.

Work on the terminal box may only be carried out by specialists who are qualified for electrical work with life-threatening voltages in accordance with the legal requirements of the respective country.

1.5 Safety sign

You will find safety signs on Beckhoff products and packaging. These attached, printed, or laser-engraved safety signs may vary depending on the product. They serve to protect people and to prevent damage to the products. Safety signs must not be removed and must be legible to the user.

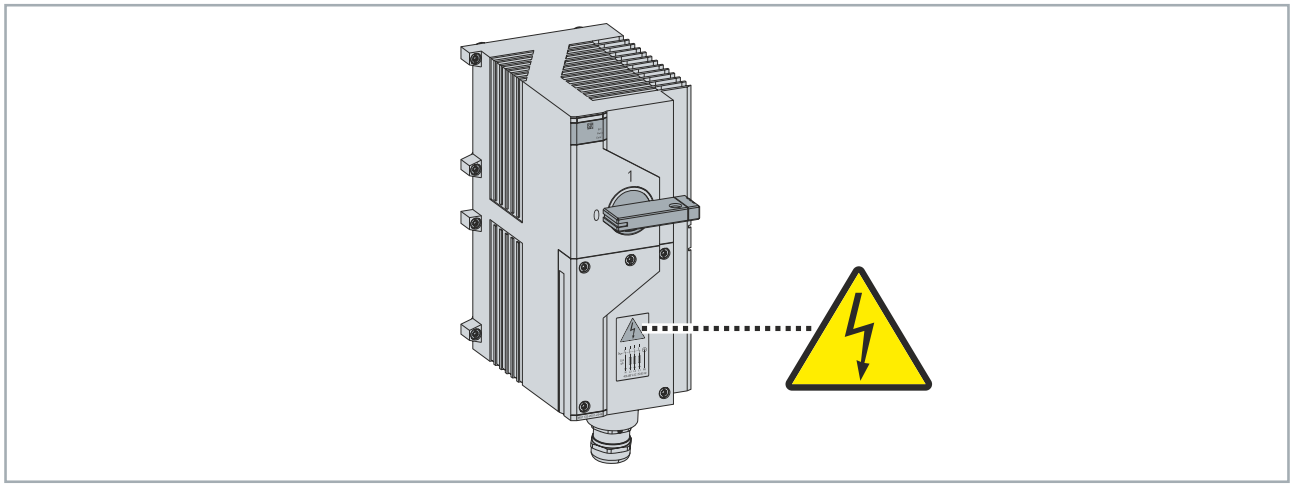

Warning: High voltage!

Risk of electric shock when terminal box is open.

2 Product overview

The MS1332-2001-2349 module is a 3-phase power infeed module with fuses on the input side and a black main switch for up to 32 A.

A PELV power supply unit with an output current of 20 A DC is integrated to supply the 24 V DC control voltage.

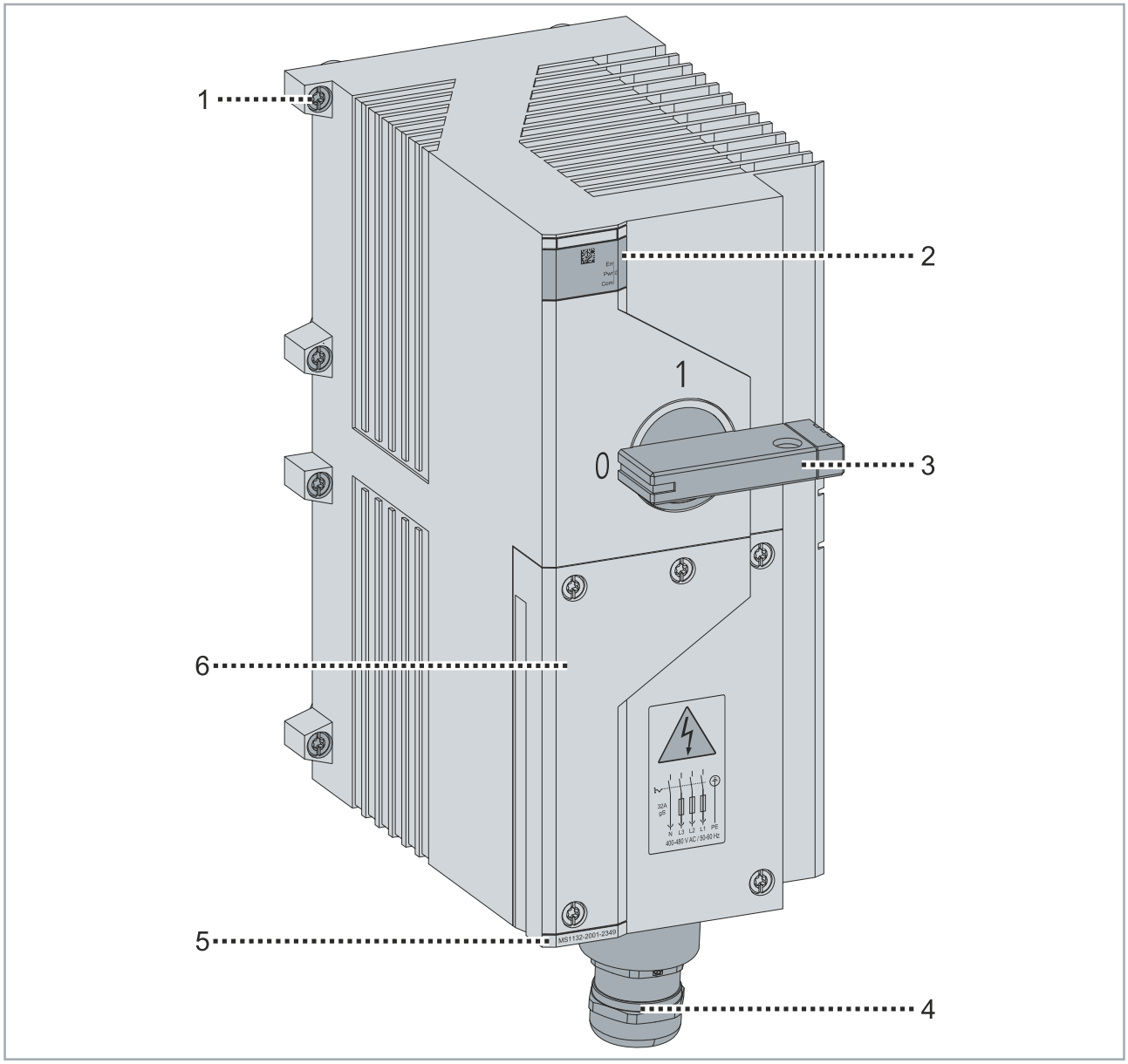

Position	Name
1	Fastening screw, captive, 4 x
2	Status display
3	Main switch
4	Cable entry (not included in scope of delivery)
5	Module name
6	Terminal box

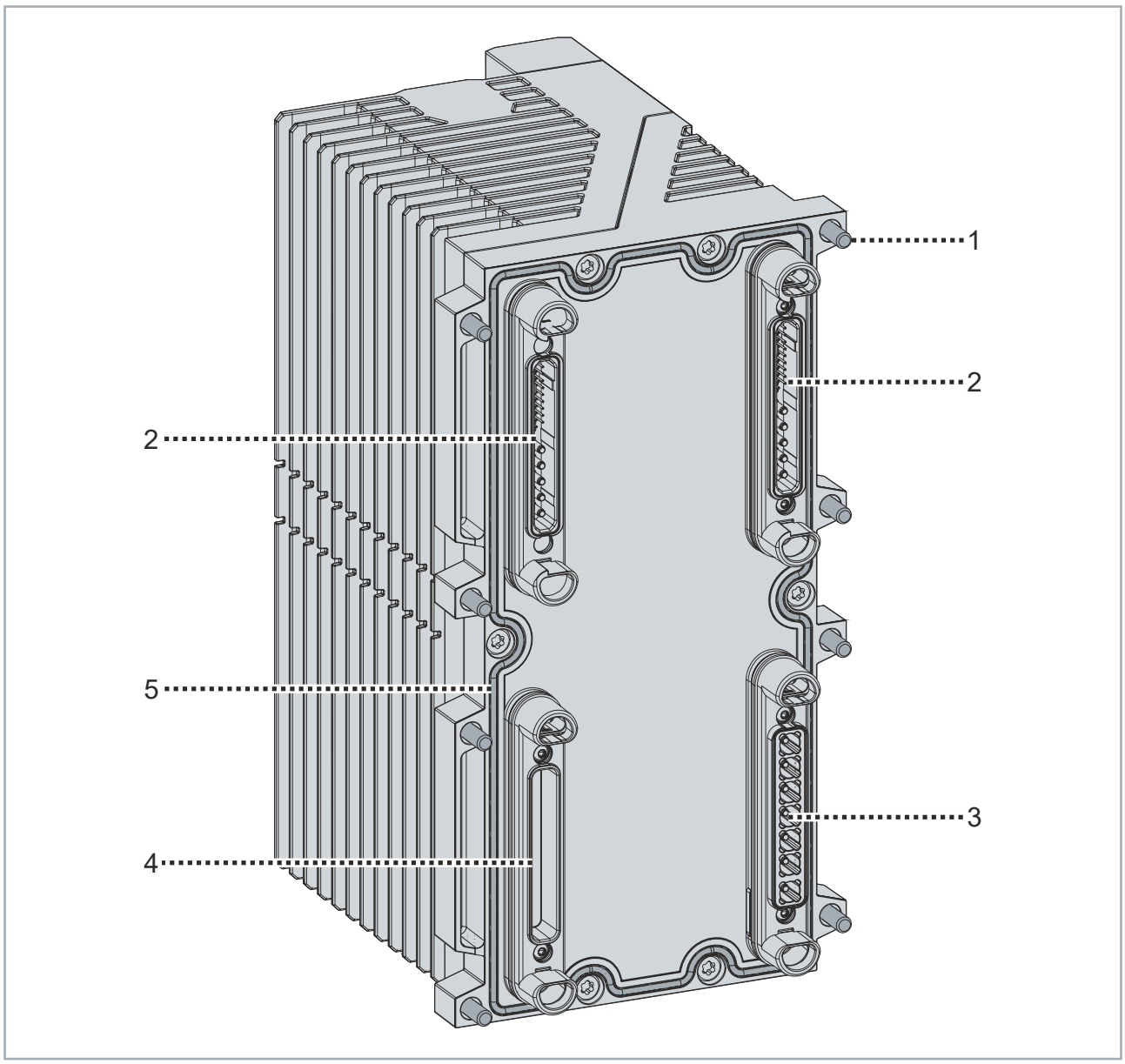

Position	Name
1	Fastening screw, captive, 8 x
2	Data connector
3	Power connector
4	Connector
5	Seal

2.1 Product functions

2.1.1 Main switch

The main switch is black. This coloring makes it a standard switch in accordance with EN 60204-1.

The main switch can be locked with a padlock when in the off state (position “0”). See chapter Secure the main switch to prevent accidental activation [▶ 29].

The main switch is designed in such a way that it prevents the terminal box from being opened in the switched-on state (position “1”). The terminal box can therefore only be opened when the module is switched off.

Also see about this

Secure the main switch to prevent accidental activation [▶ 29]

2.1.2 Electrical fuses

The module has a fuse for each phase at the power input. The fuses can be replaced by the user. See chapter Replacing the fuses [▶ 31].

The fuses respond more slowly than the fuses in modules that are supplied from the power fed in, e.g. servo drive modules. This ensures that in the event of an overload at the output of such a module, only the respective output is shutdown. The fuses of the power infeed do not yet trigger and the MX-System continues to function.

2.1.3 Power supply 24 V DC

The power supply generates a regulated output voltage of 24 V_{DC} and makes it available on the baseplate as the supply voltage U_B for other MX-System modules.

The power supply is protected against overload. An automatic overvoltage shutdown switches off the power supply if the output voltage becomes too high due to an internal error.

You can operate several power supplies in parallel to increase the output current.

2.2 Block diagram

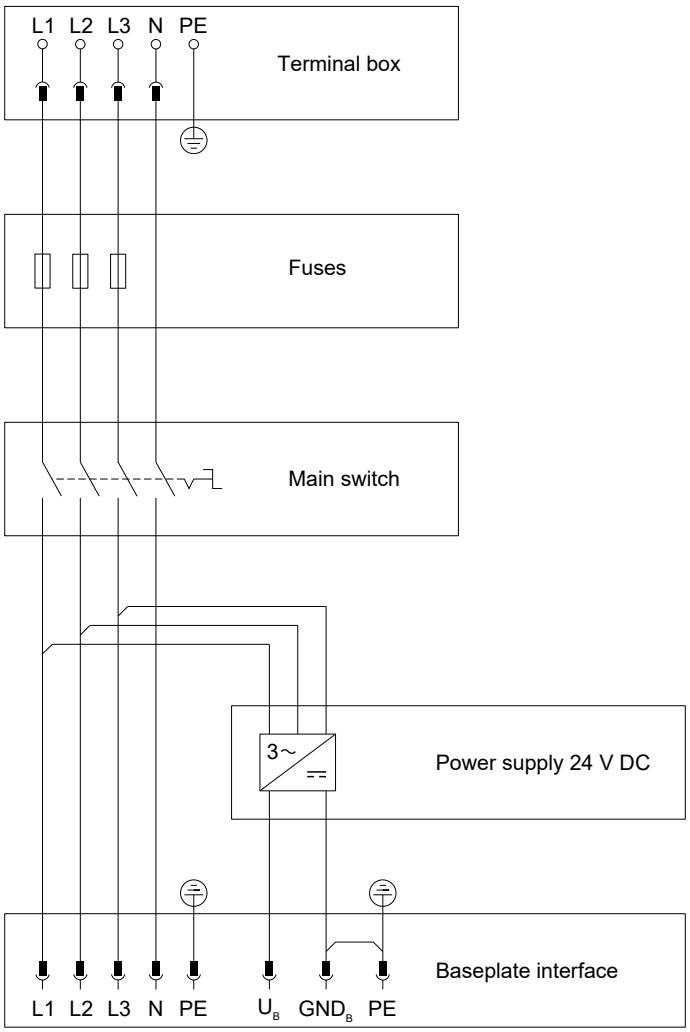

2.3 Type key

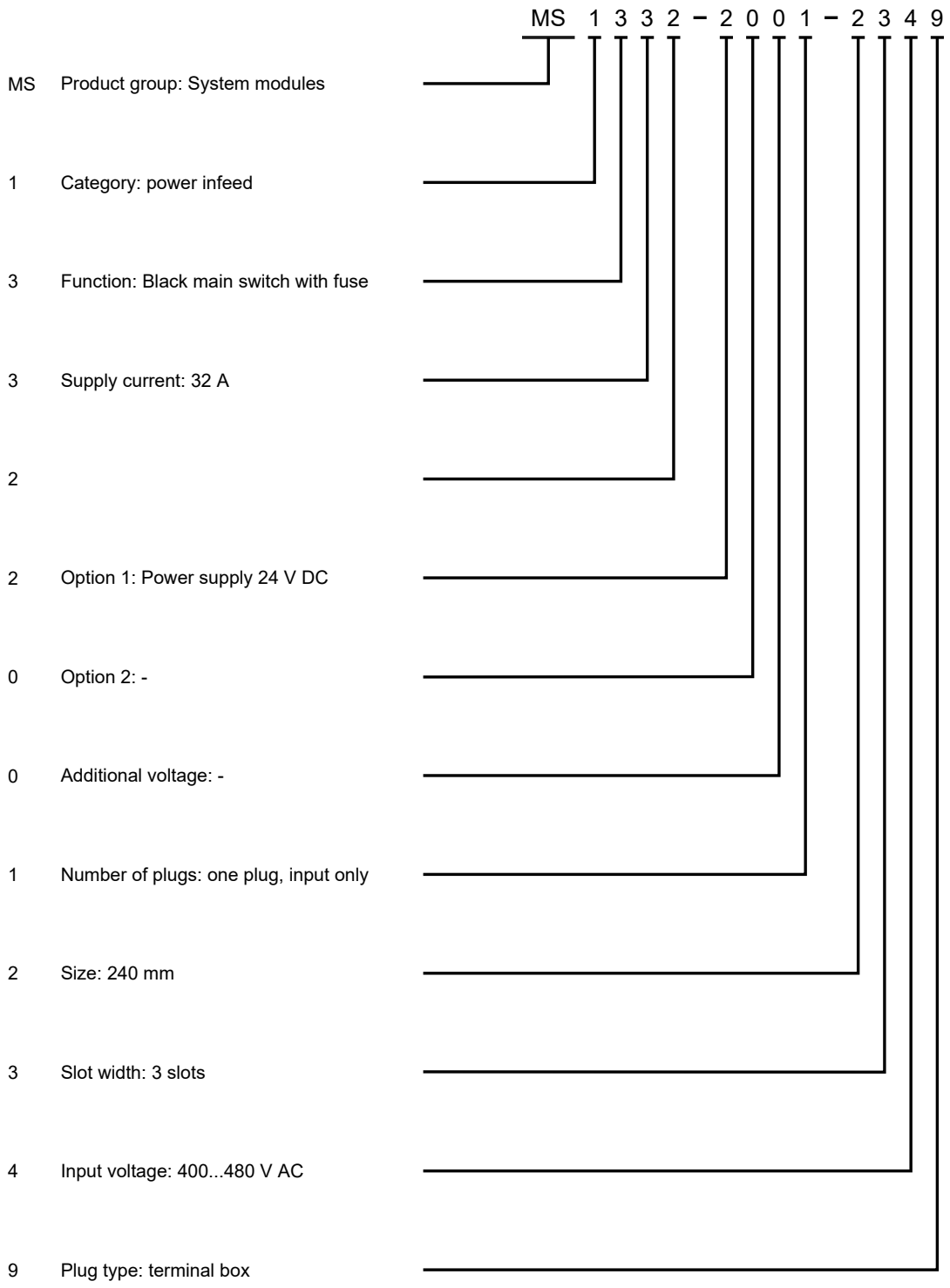
MS 1 3 3 2 – 2 0 0 1 – 2 3 4 9
MS Product group: System modules
1 Category: power infeed
3 Function: Black main switch with fuse
3 Supply current: 32 A
2
2 Option 1: Power supply 24 V DC
0 Option 2: -
0 Additional voltage: -
1 Number of plugs: one plug, input only
2 Size: 240 mm
3 Slot width: 3 slots
4 Input voltage: 400...480 V AC
9 Plug type: terminal box

2.4 Status display

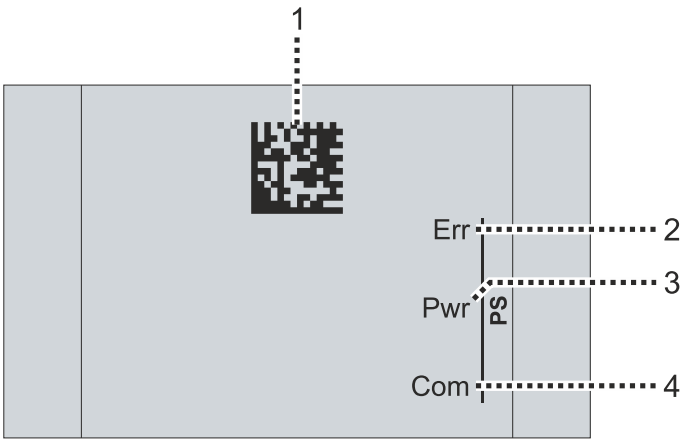

PS - Status display for the power supply

Position	Status display	Status	Explanation
1	-	-	Beckhoff Identification Code as DataMatrix code
2	Err	off	no error exists
		red illuminated	Power supply switched off due to an error
3	Pwr	off	no 24 V DC output voltage available
		green illuminated	24 V DC output voltage switched on
4	Com	off	Initialization state
		flashing green	is in *Pre-Operational* state
		single flash green	is in *Safe-Operational* state
		green illuminated	is in *Operational* state
		flickers green	Firmware is being loaded

2.5 Dimensions

All dimensions in mm

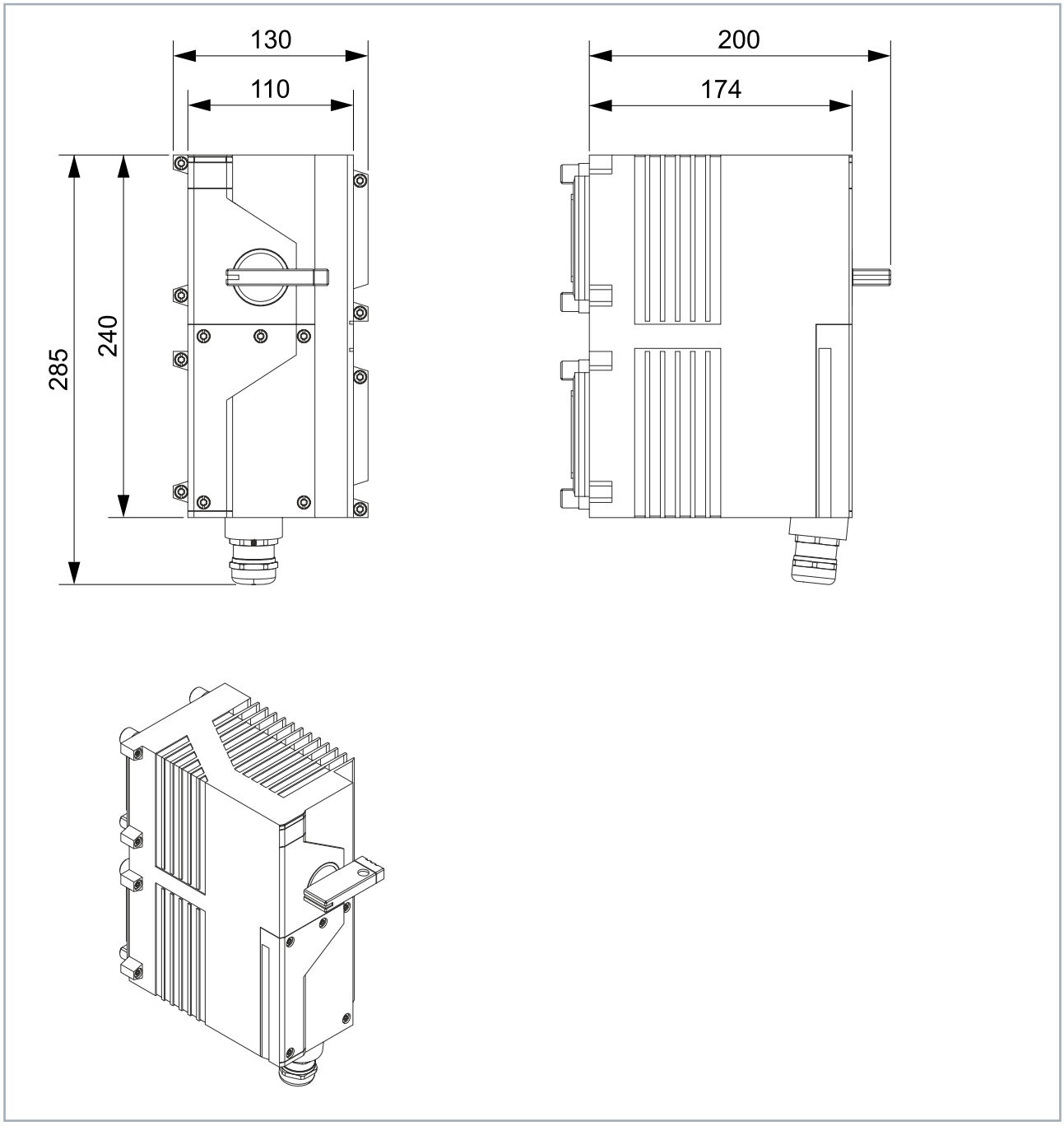

3 Technical data

All values are typical values over the entire temperature range, unless stated otherwise.

Baseplate interface	
Connector	2 data connectors 2 power connectors
Hot Swap	No

EtherCAT	
Distributed Clocks	no

Voltage input	
Connection	Screw terminals in the terminal box
Input voltage range V_{in}	3~ 400 … 480 V AC (-15 % / +10 %)
Permissible input current	max. 32 A AC Derating: 1%/K above 40 °C ambient temperature
Frequency of the input voltage	50 … 60 Hz (± 10 %)
Inrush current	< 3 A AC

Power supply	
Input voltage range V_{In}	3~ 380…480 V AC (-15 % … +10 %)
Mains frequency of the input voltage	50-60 Hz (±10 %)
Output voltage V_{Out}	24 V DC in the factory setting. Adjustable up to 28 V DC.
Overvoltage limitation	33 V DC 36 V DC (max.)
Rated output current I_{Rated}	20 A for V_{Out} = 24 V DC
	17.1 A for V_{Out} = 28 V DC
Maximum output current I_{Max}	25 A for V_{Out} = 24 V DC
	21.4 A for V_{Out} = 28 V DC
Short-circuit current	27 A
Output type	PELV
Parallel operation	permissible, max. 2 modules
Input current I_{In}	for V_{Out} = 24 V DC and I_{Out} = I_{Rated} V_{In} = 400 V AC: I_{In} = 0.8 A per phase V_{In} = 480 V AC: I_{In} = 0.7 A per phase
Power factor λ	0.95 for V_{Out} = 24 V DC and I_{Out} = I_{Rated}
Inrush current I_{In} (without current flow in filter capacitors)	4.9 A for V_{Out} = 24 V DC and I_{Out} = I_{Rated}
Efficiency η	for V_{Out} = 24 V DC and I_{Out} = I_{Rated} V_{In} = 400 V AC: η = 95.1 % V_{In} = 480 V AC: η = 94.8 %
Power loss P_{Loss}	for V_{Out} = 24 V DC and I_{Out} = I_{Rated} V_{In} = 400 V AC: P_{Loss} = 23.3 W V_{In} = 480 V AC: P_{Loss} = 24.3 W
Hold-up time	for V_{Out} = 24 V DC and I_{Out} = I_{Rated} t = 20 ms
Output decoupling for redundancy	No
Feeding back into the output	permissible up to max. 35 V DC (overvoltage limitation can trigger beforehand)
Output capacitance	5100 µF

Housing data	
Width (slots)	3
Height (rows)	2
Dimensions W × H × D	130 mm × 285 mm × 200 mm 130 mm × 240 mm × 174 mm (housing only)
Material	Zinc die-cast
Cooling	Convection
Weight	5.6 kg
Installation position	Vertical. See system manual, chapter "Installation conditions".

Environmental conditions	
Operating temperature	0 … 50 °C
Storage temperature	-25 … +60 °C
Air humidity	95 %, no condensation
Protection rating	IP20 as a separate module
	IP65 / IP67 as part of a fully and correctly assembled MX-System
Pollution degree	2
Overvoltage category	III
Maximum installation altitude	2000 m

Device safety	
Separation between input and output	Double or reinforced electrical isolation
Protection class	I

Standards, approvals	
Device safety	conforms to EN 61010-2-201
EMC immunity/emission	conforms to EN IEC 61000-6-2 / EN IEC 61000-6-4
Vibration/shock resistance	conforms to EN 60068-2-6 / EN 60068-2-27
Approvals	CE, UL in preparation

4 Software functions

Software functions are the functions of a module's firmware that a controller can access via EtherCAT.

Functionality

The following descriptions document the full range of software functions at the time of publication of this manual. The range of functions that can actually be used depends on the firmware version of a module.

4.1 Process Data Objects (PDOs)

The process data objects are disabled on delivery. You can enable them via the Predefined PDO Assignments.

If the process data objects are activated, they can be displayed under the subordinate device MS6020-1100-0040.

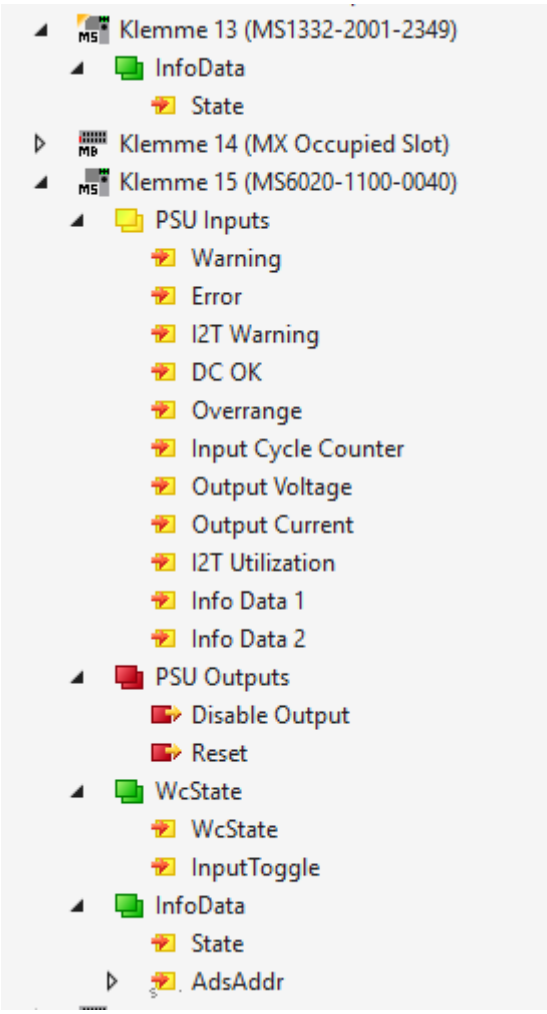

5 Mechanical installation

Required tools

- Torx T25 screwdriver
- Torque wrench 5 Nm

5.1 Preparation

NOTICE

Check the module for damage

If the seal is worn or damaged, liquids and dirt can penetrate and damage the MX-System. The IP65/IP67 protection rating is not met if the seals are worn or damaged.

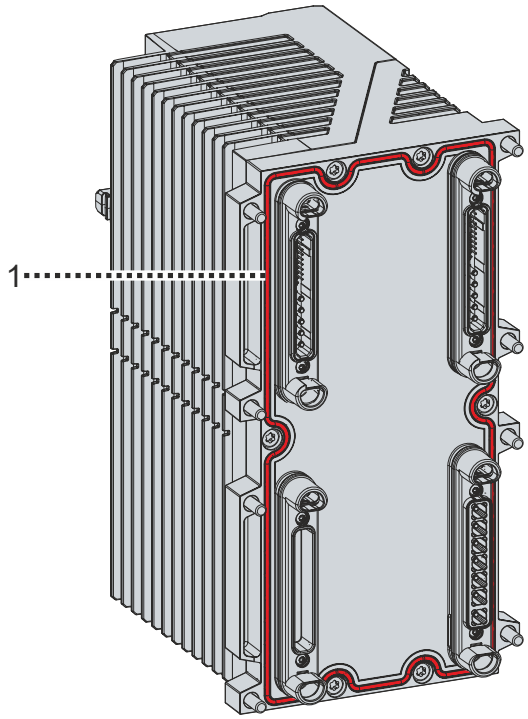

1. Check the seal [1] of the module for wear and damage
2. Replace worn and damaged seals

5.2 Placement of the module on the baseplate

The module can be plugged into the following areas marked in green:

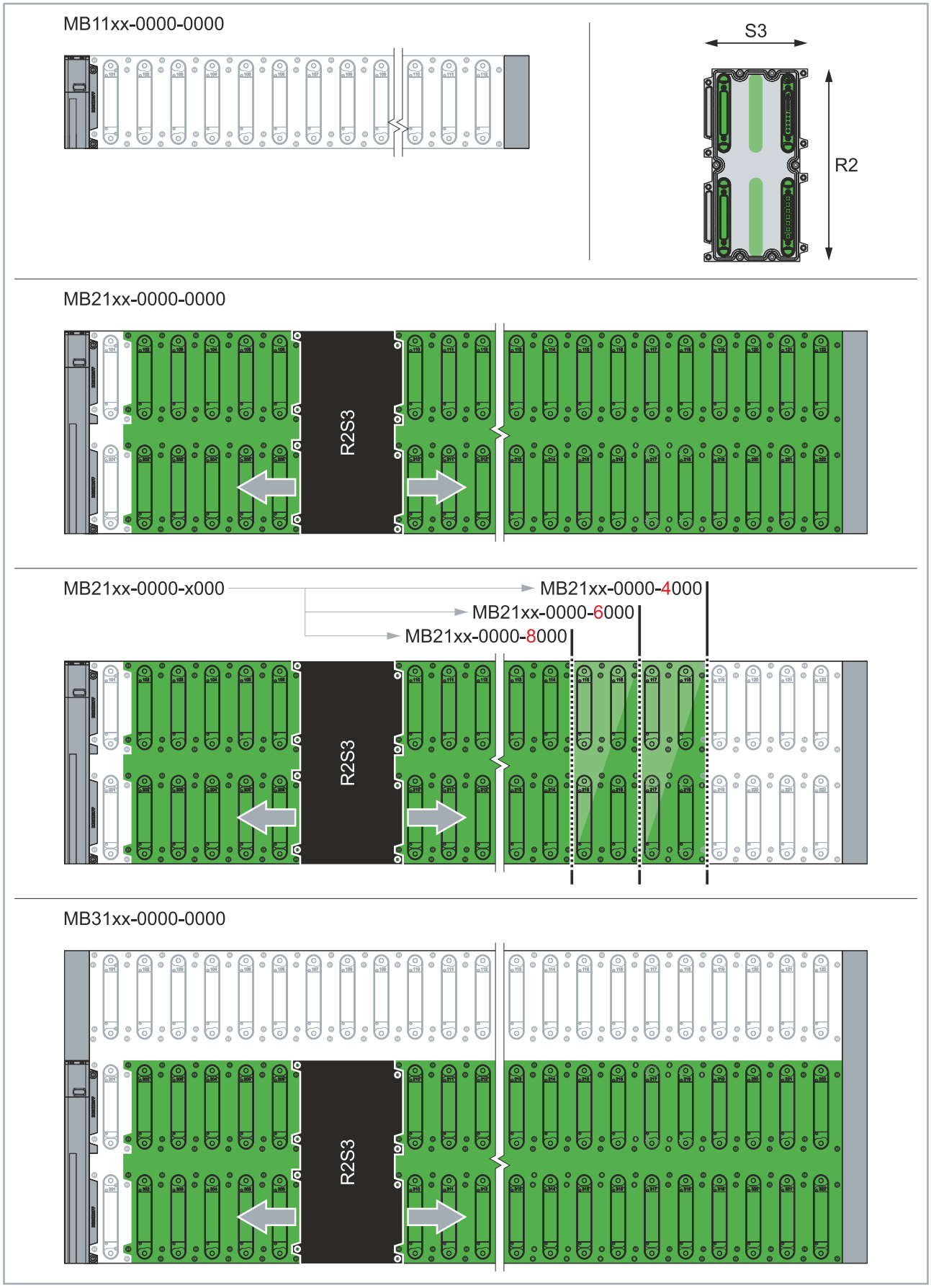

5.3 Mounting the module

⚠ CAUTION

Danger due to the high weight of an equipped baseplate

First mount the baseplate and then the modules to the baseplate. If you mount the modules on the baseplate first, the total weight of the MX-System will increase. Another person is required to transport and assemble an equipped baseplate.

- Wear personal protective equipment.
- The equipped baseplate must be transported and mounted by two people.

NOTICE

Ensure correct installation

If the module is not installed correctly, liquids and dirt may enter and damage the MX-System. The IP65/IP67 protection rating is not met if the installation is incorrect.

NOTICE

Limited number of mating cycles

The module may be plugged in a maximum of 25 times to attach it to the baseplate. If the module is plugged into the baseplate more than 25 times, a secure connection between the module and the baseplate cannot be guaranteed.

- Observe the permissible number of mating cycles.
- Replace the module if the number of mating cycles is exceeded.
- Replace the baseplate if the number of mating cycles is exceeded.

The module must be plugged into data slot *101* and the power slot *201* below it on a baseplate. The data slots *102* and *103* as well as the power slots *202* and *203* are also required for design reasons.

1. Plug the module on the baseplate
2. Tighten all screws
3. Observe tightening torques:

Components	Tightening torque [Nm]
Screws	5

Further information on installation can be found in the system manual in the "Mounting" chapter.

6 Connection

NOTICE

Defect caused by hot plug

If cables are connected or disconnected during operation, damage to property is possible.

- Only connect or disconnect cables when all supply voltages have been shutdown.

6.1 Connecting the power cable

⚠ WARNING

Danger to life due to electric shock

Errors in electrical connection can lead to death, personal injury, or property damage.

- Observe personnel qualifications. Work on the terminal box may only be carried out by qualified personnel for electrical work.
- Follow the instructions below exactly.

1. Set the main switch to position "0"
2. Apply the five safety rules of electrical engineering to create a safe working environment
3. Ensure that the module is correctly mounted on a baseplate

For more information, refer to the system manual in the chapter “Installation”.

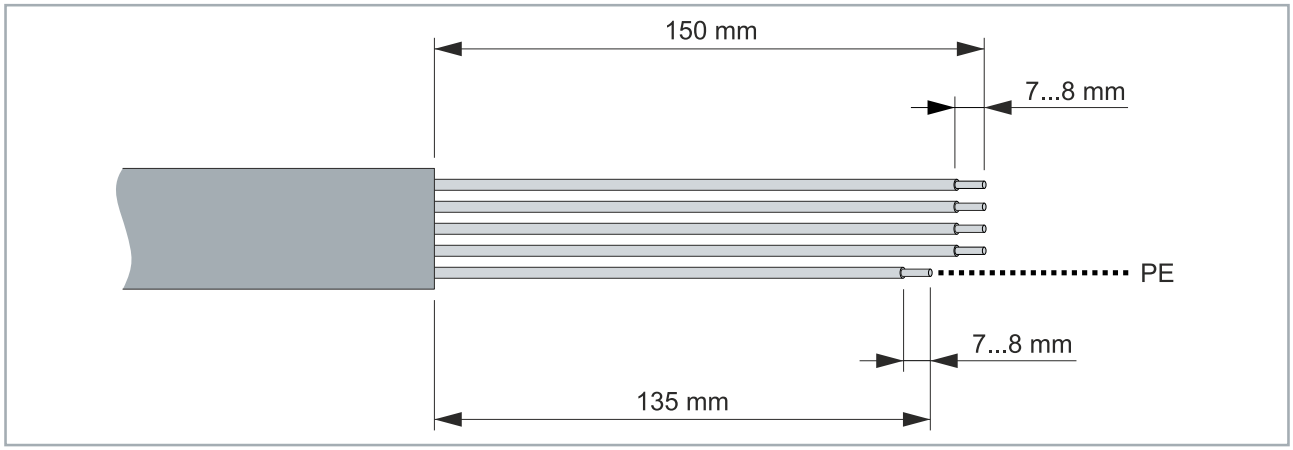

4. Strip 150 mm of sheathed cable
5. Shorten PE wire [PE] to 135 mm
6. Strip 7 mm to 8 mm of insulation from all wires

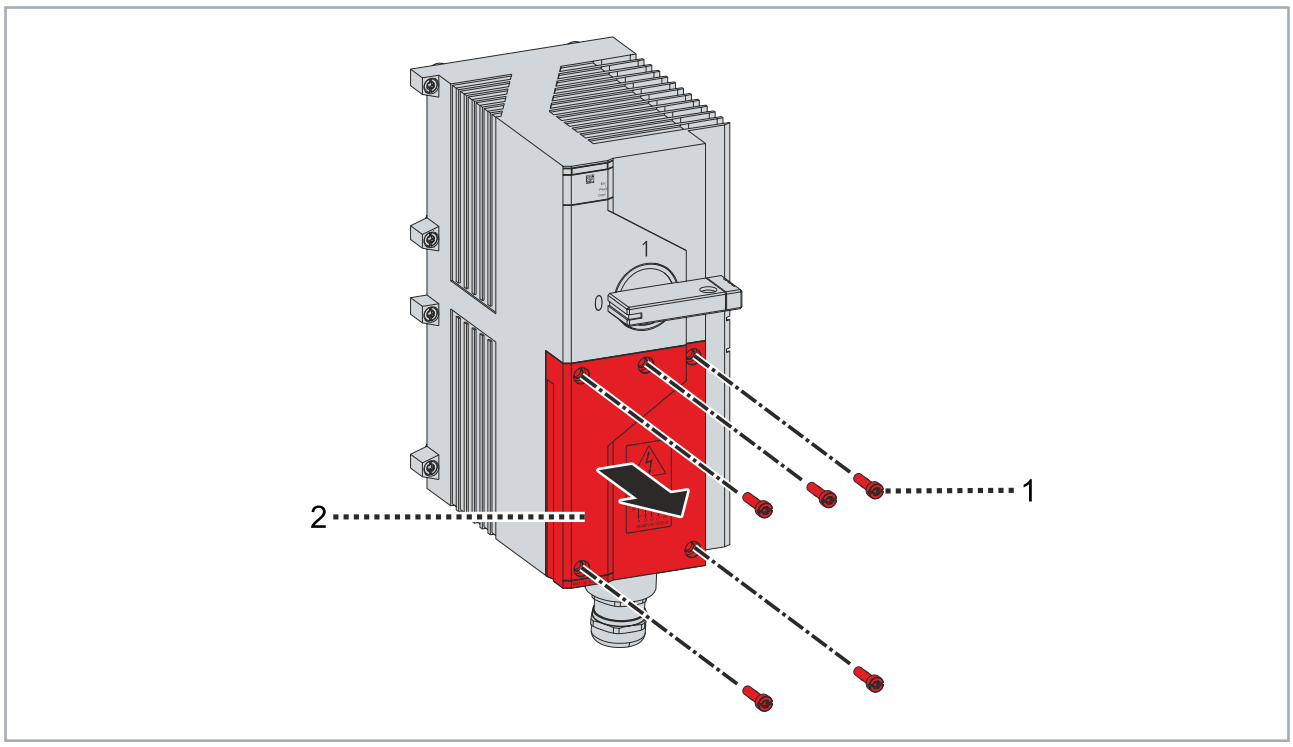

7. Remove the screws [1] of the terminal box and remove the terminal box [2]

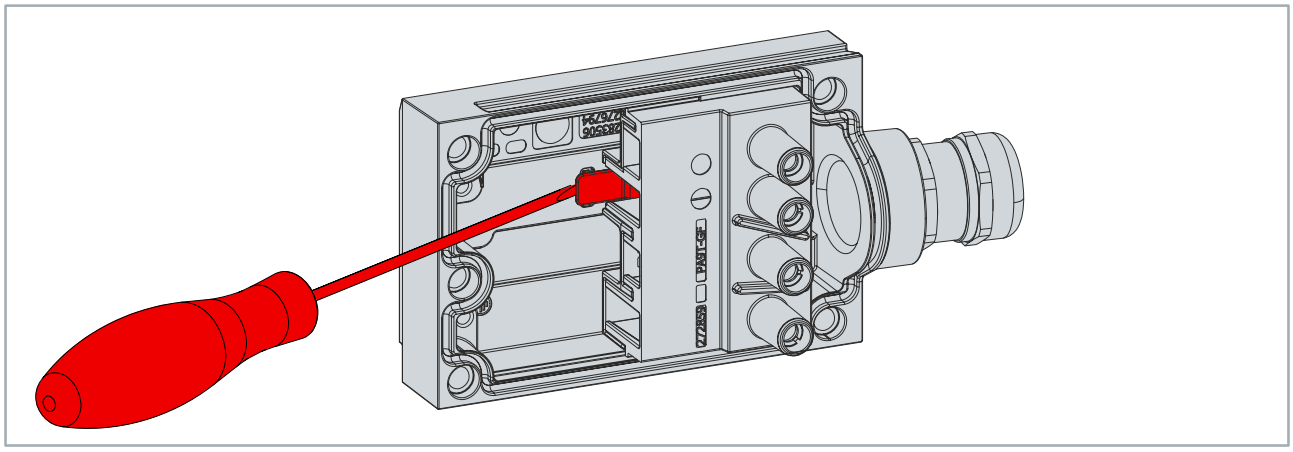

8. Release the supply plug from the terminal box

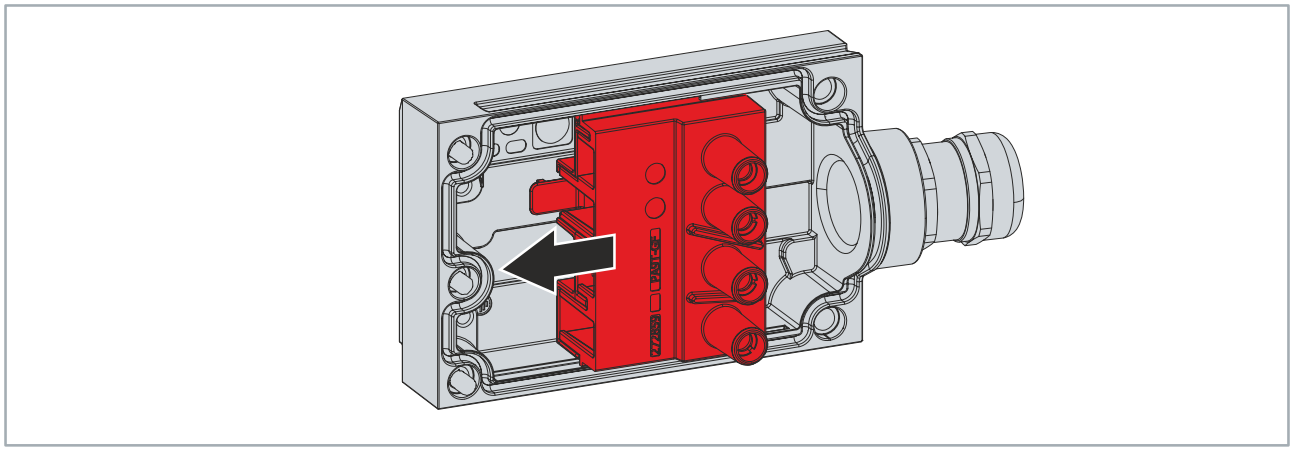

9. Push the supply plug in the terminal box to the side

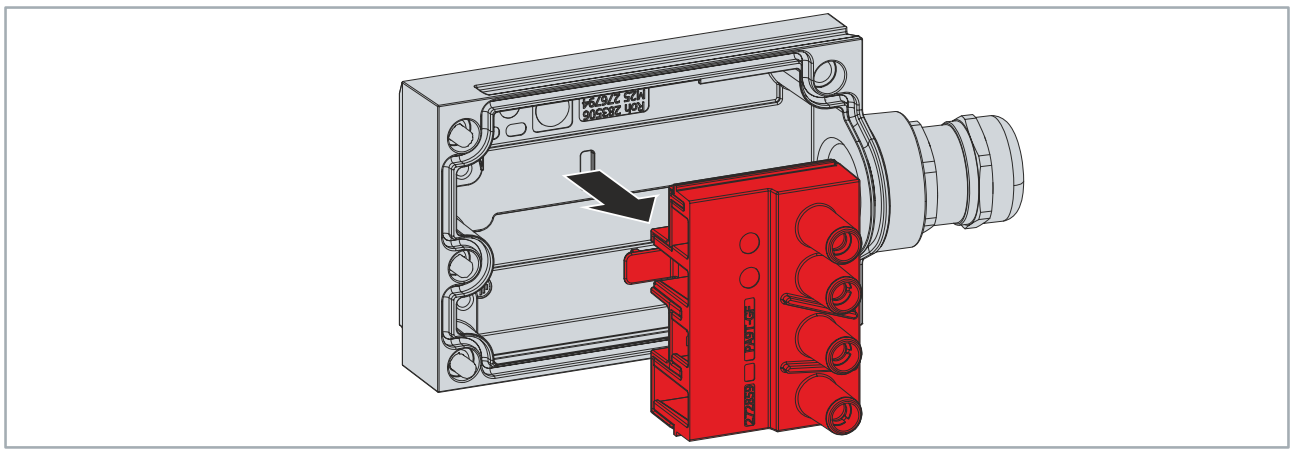

10. Remove the supply plug

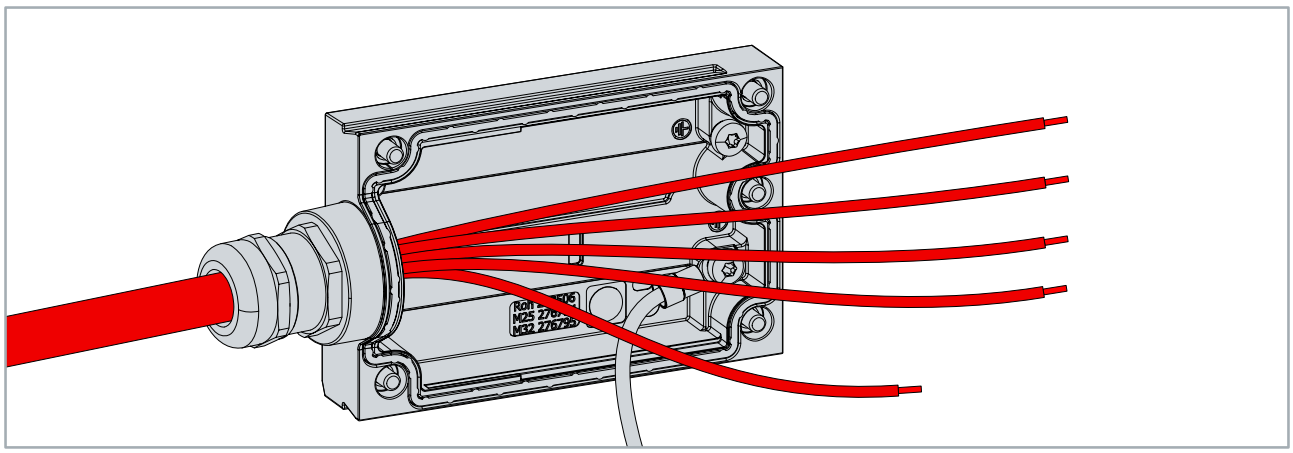

11. Feed the cable through the cable gland
12. Ensure that the end of the sheath is just completely inside the cable gland
13. Tighten the cable gland with the wrench
14. Observe tightening torques:

Component	Tightening torque [Nm]
Cable gland	12

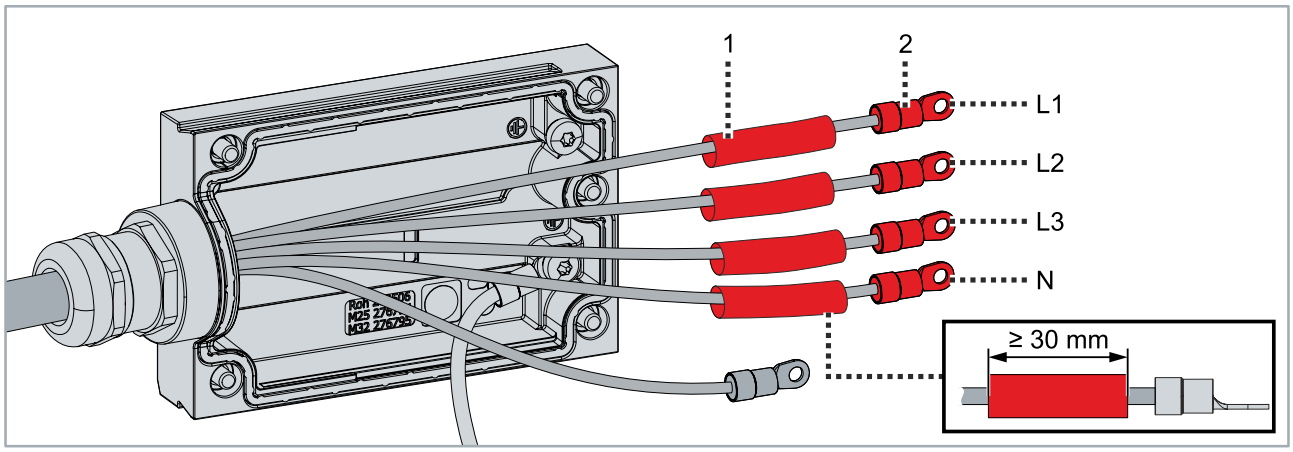

If you are using tubular cable lugs and UL508A compliance is required:

15. Slide at least 30 mm long heat-shrink tubing [1] over the wire ends of L1, L2, L3 and N
16. Use the crimp tool to professionally attach cable lugs [2] to all wire ends
17. Ensure that no wire ends are sticking out

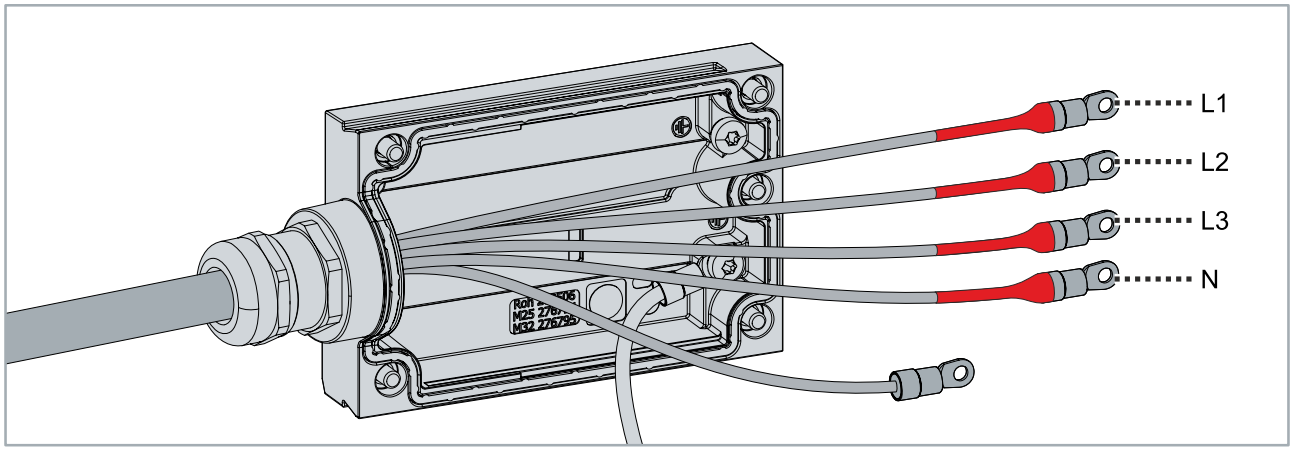

If you are using tubular cable lugs and UL508A compliance is required:

18. Shrink heat-shrink tubing over cables and cable lugs

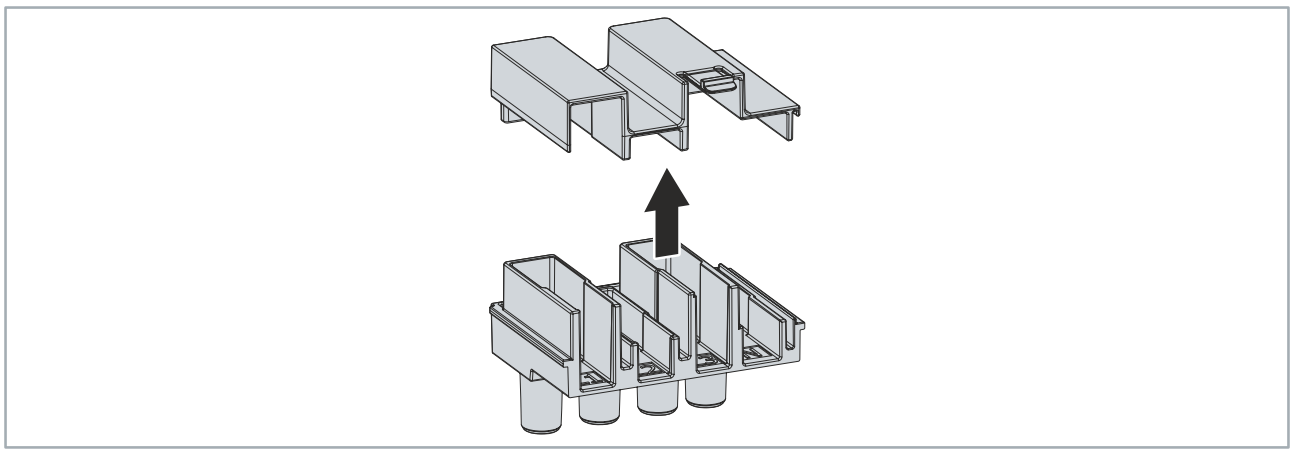

19. Open the supply plug

NOTICE

Be sure to connect all three phases

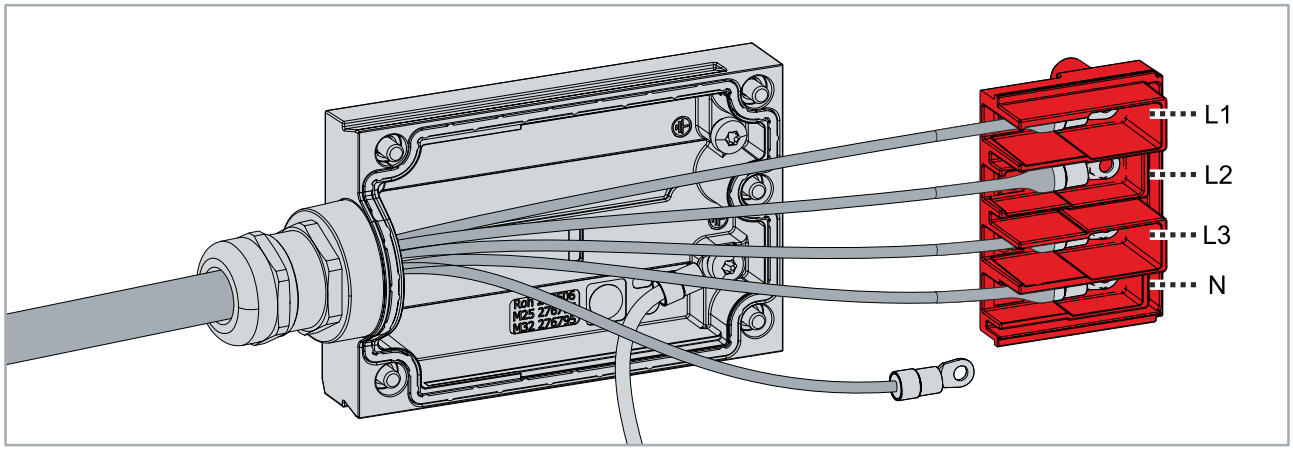

20. Screw on L1, L2, L3 and N with the socket wrench in the supply plug
21. Observe tightening torques:

Component	Tightening torque [Nm]
Screws	5

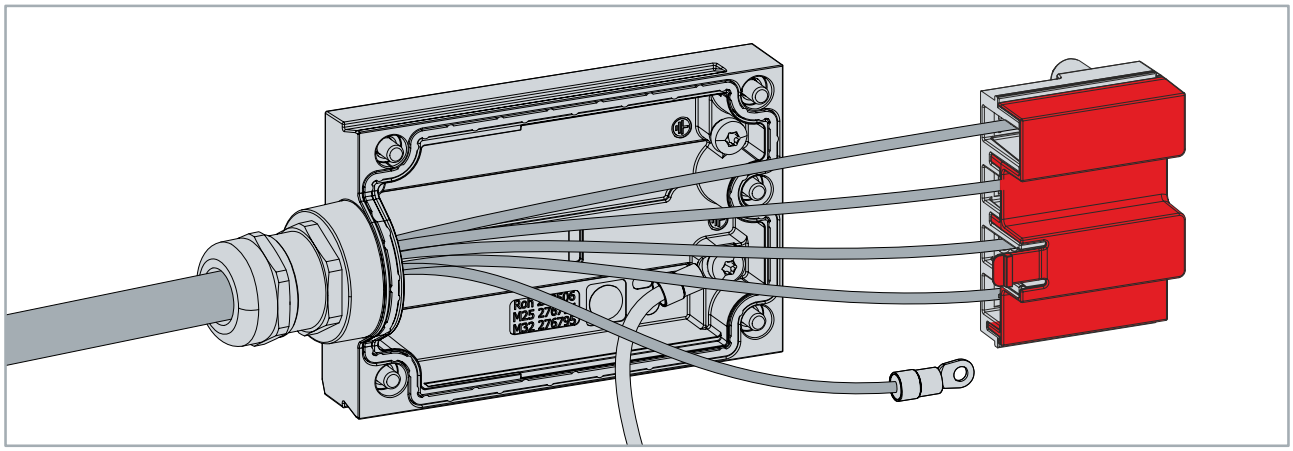

22. Close the supply plug

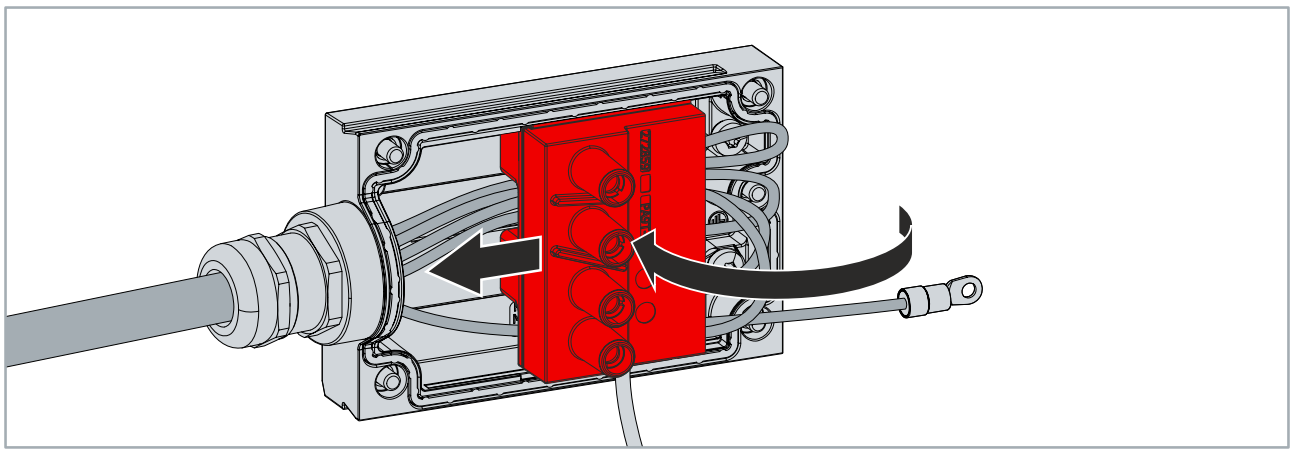

23. Insert the supply plug into the terminal box and push it to the left until the supply plug engages

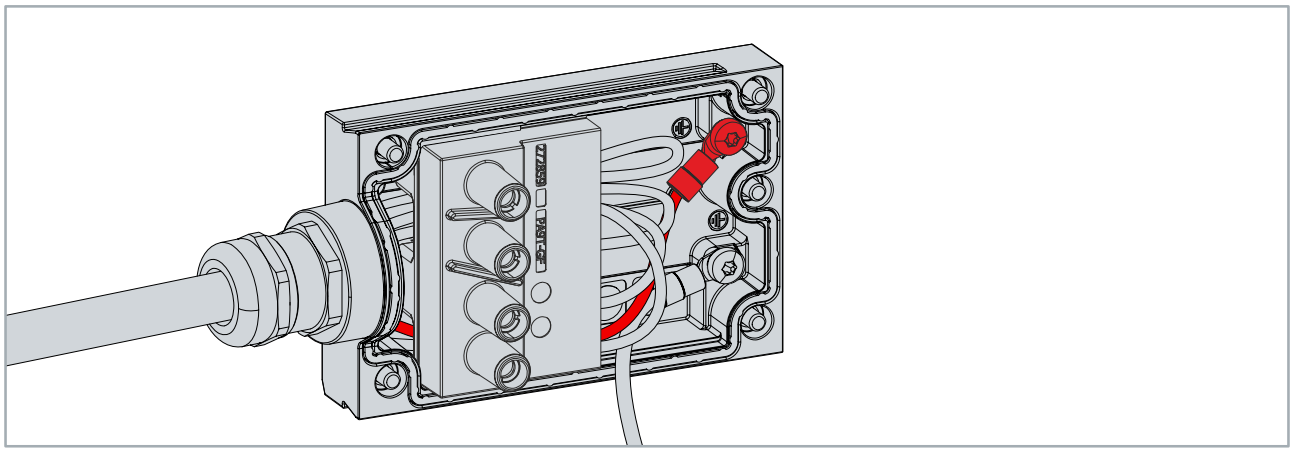

24. Secure the PE wire in the terminal box
25. Observe tightening torques:

Component	Tightening torque [Nm]
Screws	5

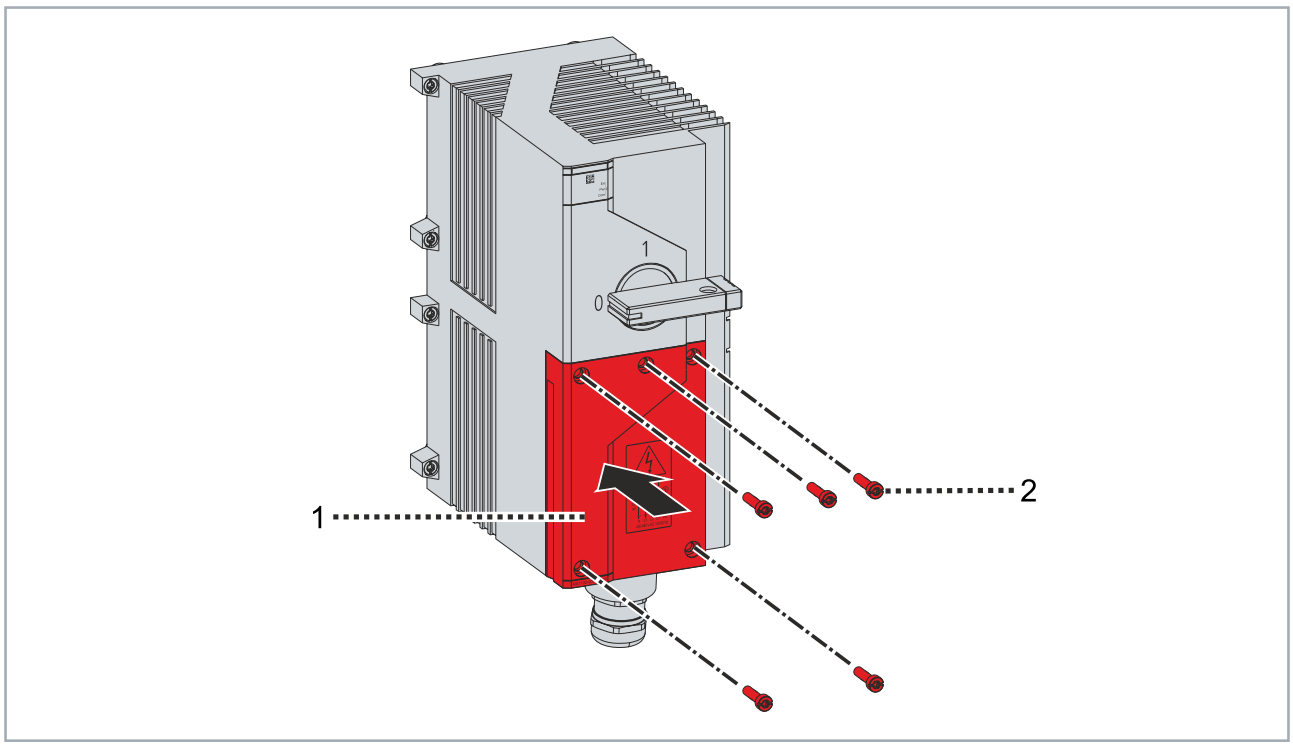

26. Place terminal box [1] on the module
27. Tighten screws [2]

7 Commissioning and operation

⚠ WARNING

Danger to life due to electric shock

After switching on, a life-threatening voltage may be present at open connectors.

- Before switching on, make sure that all components supplied with power voltage are fully and properly installed and correctly wired.
- Before switching on, ensure that unused connectors and other connections are covered with the sealing caps, dummy caps or protective caps provided for this purpose.

NOTICE

Damage to property due to operation in an unsuitable environment

Before commissioning, ensure that the environmental conditions at the place of commissioning and operation are complied with at all times.

1. Plug the module into a baseplate.
2. Screw the module onto the baseplate.
3. Wire the module.
4. Switch on the external supply voltage.

7.1 During operation

7.1.1 Secure the main switch to prevent accidental activation

You can secure the main switch with a padlock to prevent it from being switched on. The diameter of the shackle must be smaller than 9 mm.

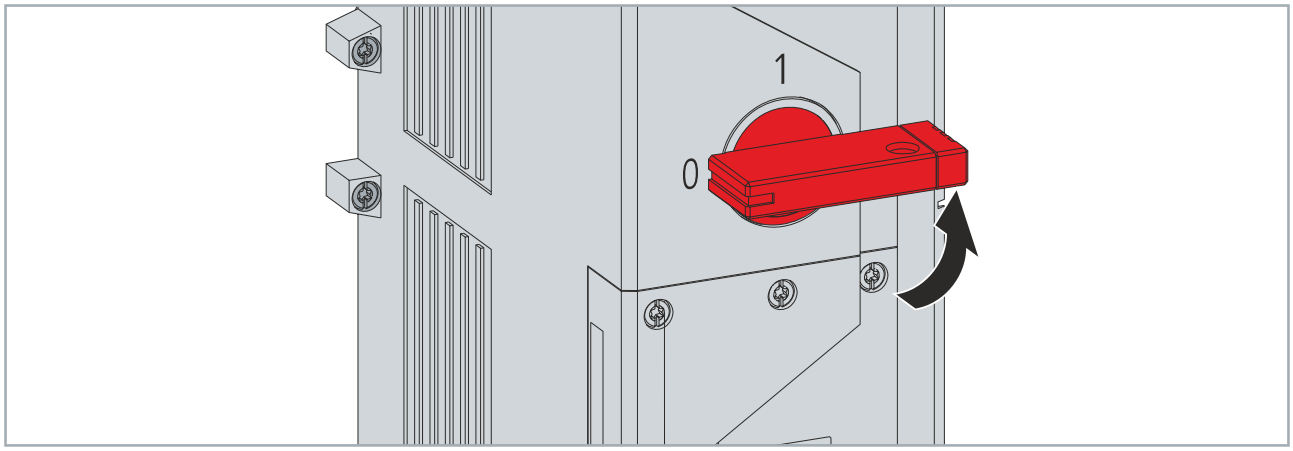

1. Set the main switch to position "0"

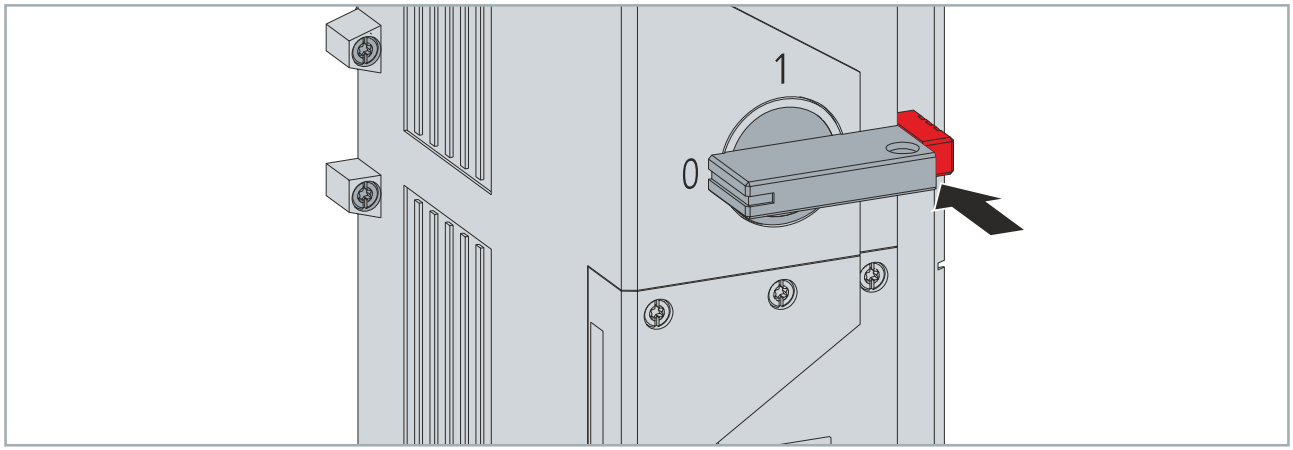

2. Press down the cap at the end of the main switch
   ⇨ The main switch can no longer be moved.
   ⇨ The hole in the main switch is open.

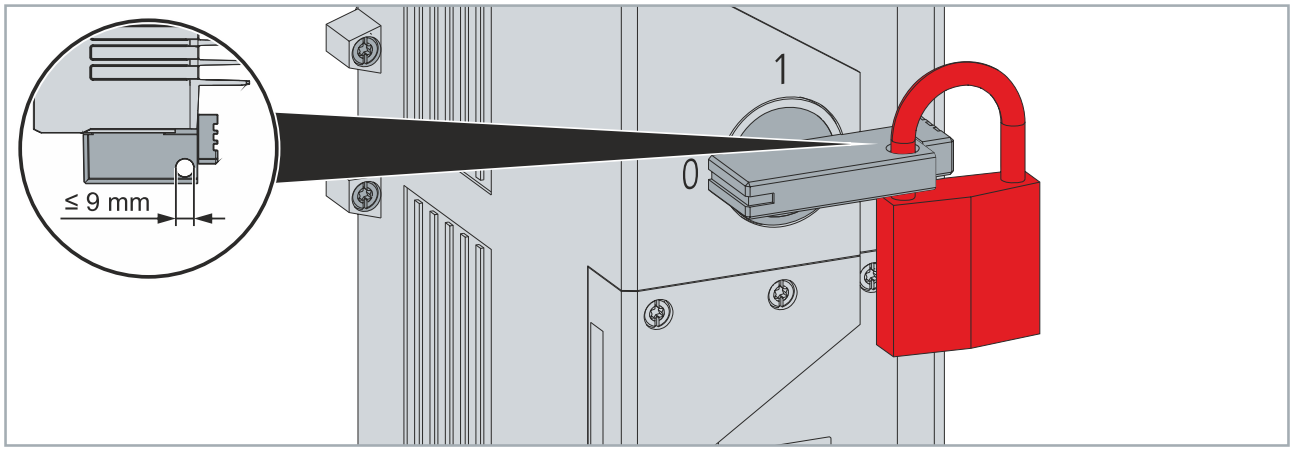

3. Guide the padlock shackle through the hole in the main switch
4. Close the padlock

7.2 Replacing the fuses

⚠ WARNING

Danger to life due to electric shock

Errors in electrical connection can lead to death, personal injury, or property damage.

- Observe personnel qualifications. Work on the terminal box may only be carried out by qualified personnel for electrical work.
- Follow the instructions below exactly.

If a fuse has triggered, you must replace it immediately.

You may need to replace other fuses in the MX-System. The short circuit that triggered the fuse may have damaged other fuses.

Type of fuses: SIBA 50 058 08.40.

1. Switch off the external supply voltage
2. Apply the five safety rules of electrical engineering to create a safe working environment
3. Set the main switch to position "0"

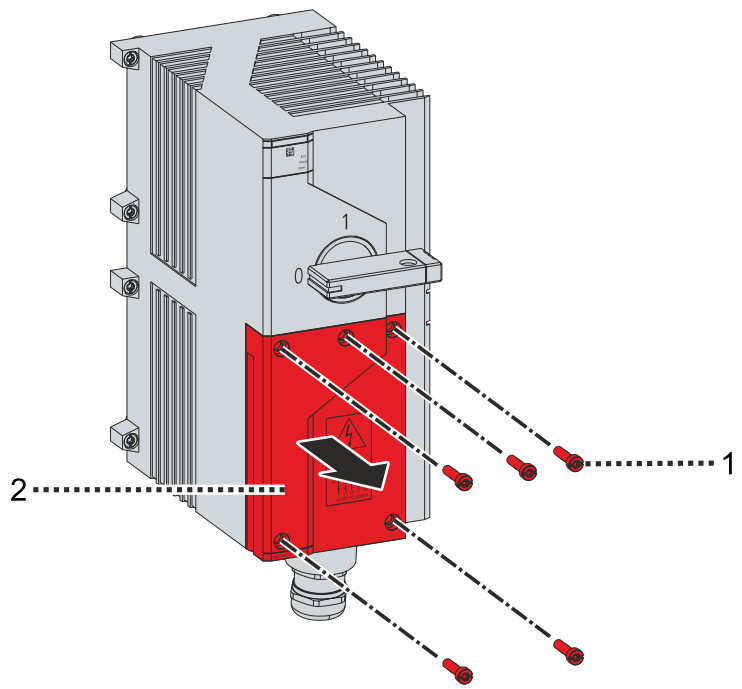

4. Loosen the screws [1] of the terminal box and remove the terminal box [2]

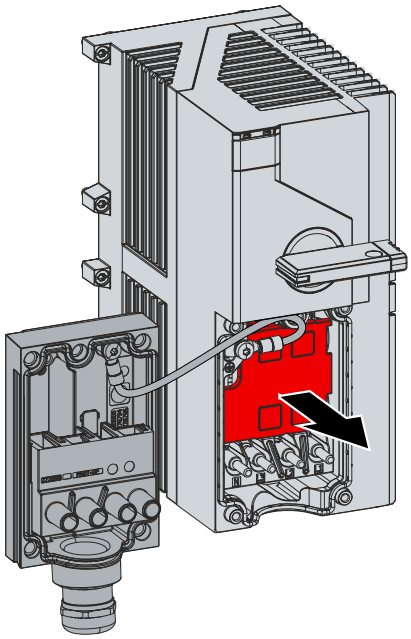

5. Remove the fuse cover

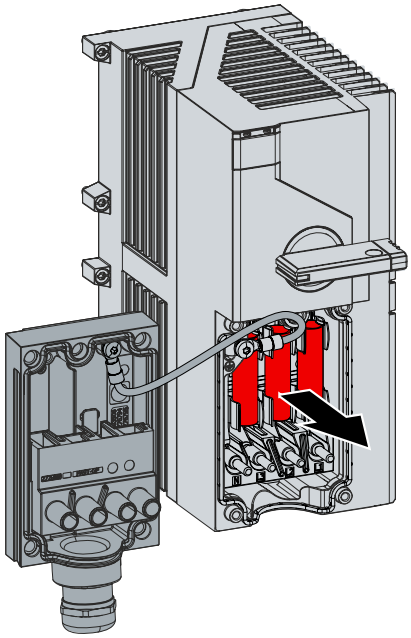

6. Remove old fuse with pliers

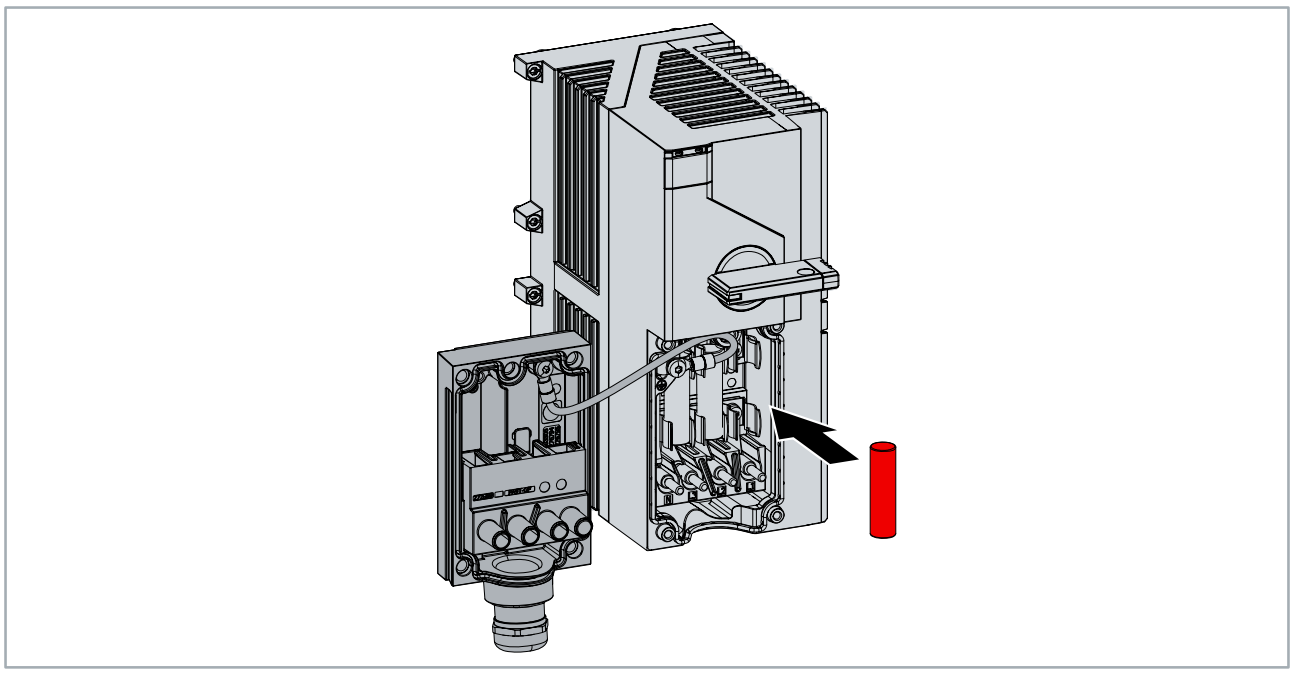

7. Insert new fuse by hand

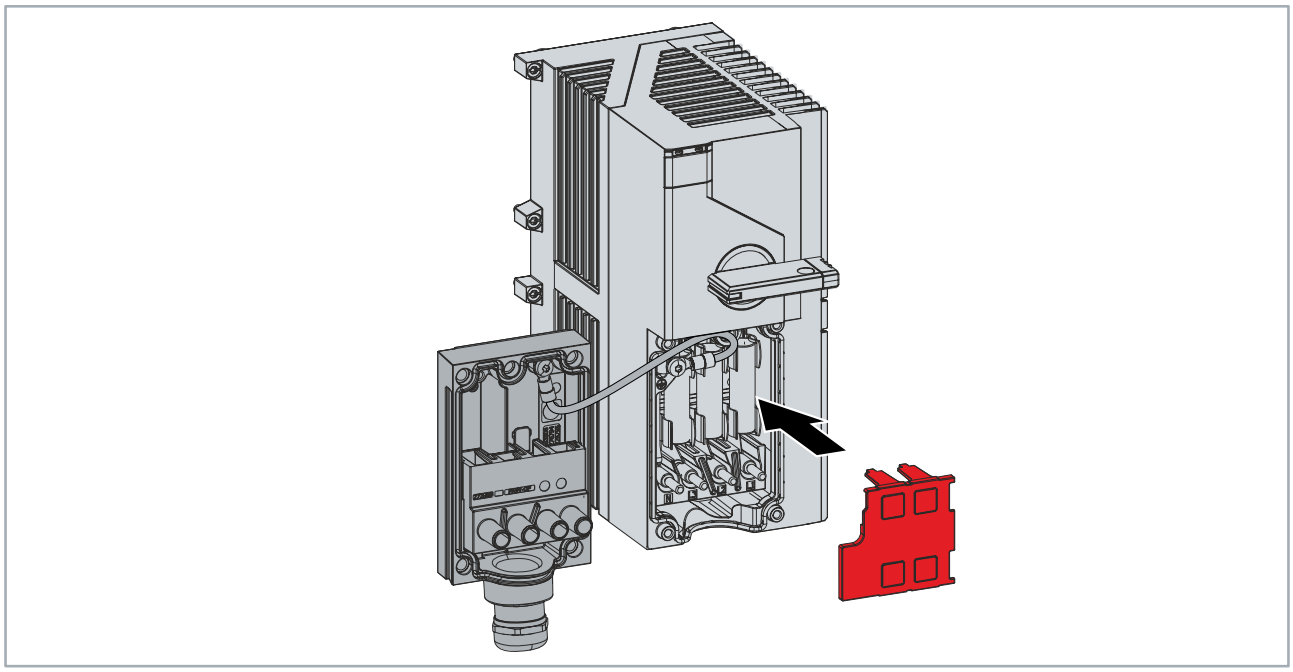

8. Insert the fuse cover

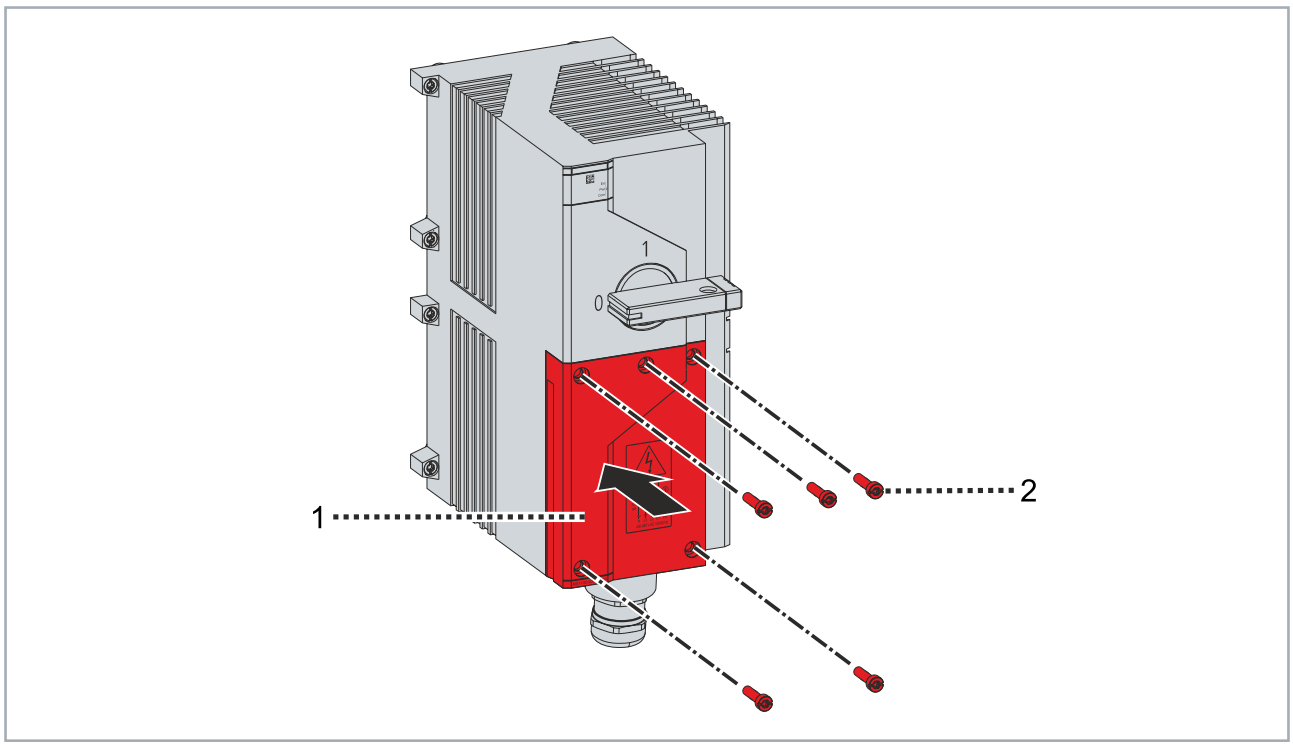

9. Place the terminal box [1] on the module
10. Tighten screws [2]
11. Observe tightening torques:

Component	Tightening torque [Nm]
Screws, M5 x 12	5

8 Decommissioning

8.1 Disassembly

⚠ WARNING

Danger to life due to electric shock

After disconnecting from the supply voltage, a life-threatening voltage is still present at the contacts of the DC link voltage. Touching the contacts can lead to death or injury from electric shock.

- After disconnecting from the supply network, wait 10 minutes before starting disassembly.

Disassembly may only be carried out by qualified and trained technical personnel.

✓ The supply voltage is shut down.

1. Remove cables.
2. Loosen all mounting screws of the module.
3. Take the module off the baseplate.

⇨ The module has been removed correctly.

8.2 Disposal

Products marked with a crossed-out wheeled bin shall not be discarded with the normal waste stream. The device is considered as waste electrical and electronic equipment. The national regulations for the disposal of waste electrical and electronic equipment must be observed.

9 Appendix

9.1 Manual version history

The following table shows the version history of this manual.

Version	Comment
1.0	• First release

9.2 Support and Service

Beckhoff and their partners around the world offer comprehensive support and service, making available fast and competent assistance with all questions related to Beckhoff products and system solutions.

Download finder

Our download finder contains all the files that we offer you for downloading. You will find application reports, technical documentation, technical drawings, configuration files and much more.

The downloads are available in various formats.

Beckhoff's branch offices and representatives

Please contact your Beckhoff branch office or representative for local support and service on Beckhoff products!

The addresses of Beckhoff's branch offices and representatives round the world can be found on our internet page: www.beckhoff.com

You will also find further documentation for Beckhoff components there.

Beckhoff Support

Support offers you comprehensive technical assistance, helping you not only with the application of individual Beckhoff products, but also with other, wide-ranging services:

- support
- design, programming and commissioning of complex automation systems
- and extensive training program for Beckhoff system components

Hotline:	+49 5246 963-157
e-mail:	support@beckhoff.com

Beckhoff Service

The Beckhoff Service Center supports you in all matters of after-sales service:

- on-site service
- repair service
- spare parts service
- hotline service

Hotline:	+49 5246 963-460
e-mail:	service@beckhoff.com

Beckhoff Headquarters

Beckhoff Automation GmbH & Co. KG

Huelshorstweg 20
33415 Verl
Germany

Phone:	+49 5246 963-0
e-mail:	info@beckhoff.com
web:	www.beckhoff.com

9.3 Accessories

Suitable accessories can be found on the product website:

https://www.beckhoff.com/ms1332-2001-2349

Product	Description
ZMX1000-0010	M5x17.5 combi-TX25 replacement screws for module fastening (PU = 10 pcs.)
ZMX2001-0000	Replacement supply plug for MS1x32
ZMX3001-0012	1-row, 2-slot replacement seal for module base
ZMX3002-0000	Replacement seal for MS1x32 connection cover
ZMX4001-0001	Replacement cover for potential equalization for 1-row baseplate with Beckhoff logo
ZMX4001-0002	Replacement cover for potential equalization for 2- and 3-row baseplate with Beckhoff logo
ZMX5000-0032	Replacement connection cover for MS1x32 (M32x1.5 screw connection)
ZMX5000-0025	Replacement connection cover for MS1x32 (M25x1.5 screw connection)
ZMX5000-0040	Replacement connection cover for MS1x32 (M40x1.5 screw connection)

The following items are also available for replacing worn parts:

MX seal S3R2

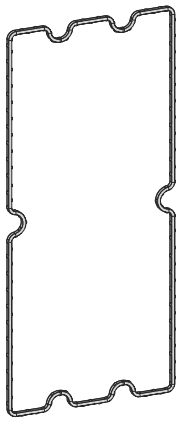

The S3R2 seal is available to replace worn and damaged seals on a 2-row MX module with three slots.

Trademark statements

Beckhoff®, ATRO®, EtherCAT®, EtherCAT G®, EtherCAT G10®, EtherCAT P®, MX-System®, Safety over EtherCAT®, TC/BSD®, TwinCAT®, TwinCAT/BSD®, TwinSAFE®, XFC®, XPlanar® and XTS® are registered and licensed trademarks of Beckhoff Automation GmbH.

More Information:
www.beckhoff.com/ms1332-2001-2349

Beckhoff Automation GmbH & Co. KG
Hülshorstweg 20
33415 Verl
Germany
Phone: +49 5246 9630
info@beckhoff.com
www.beckhoff.com