BECKHOFF New Automation Technology

Manual | EN

MO1008-0000-1111

8-channel digital input, 24 V DC, M8

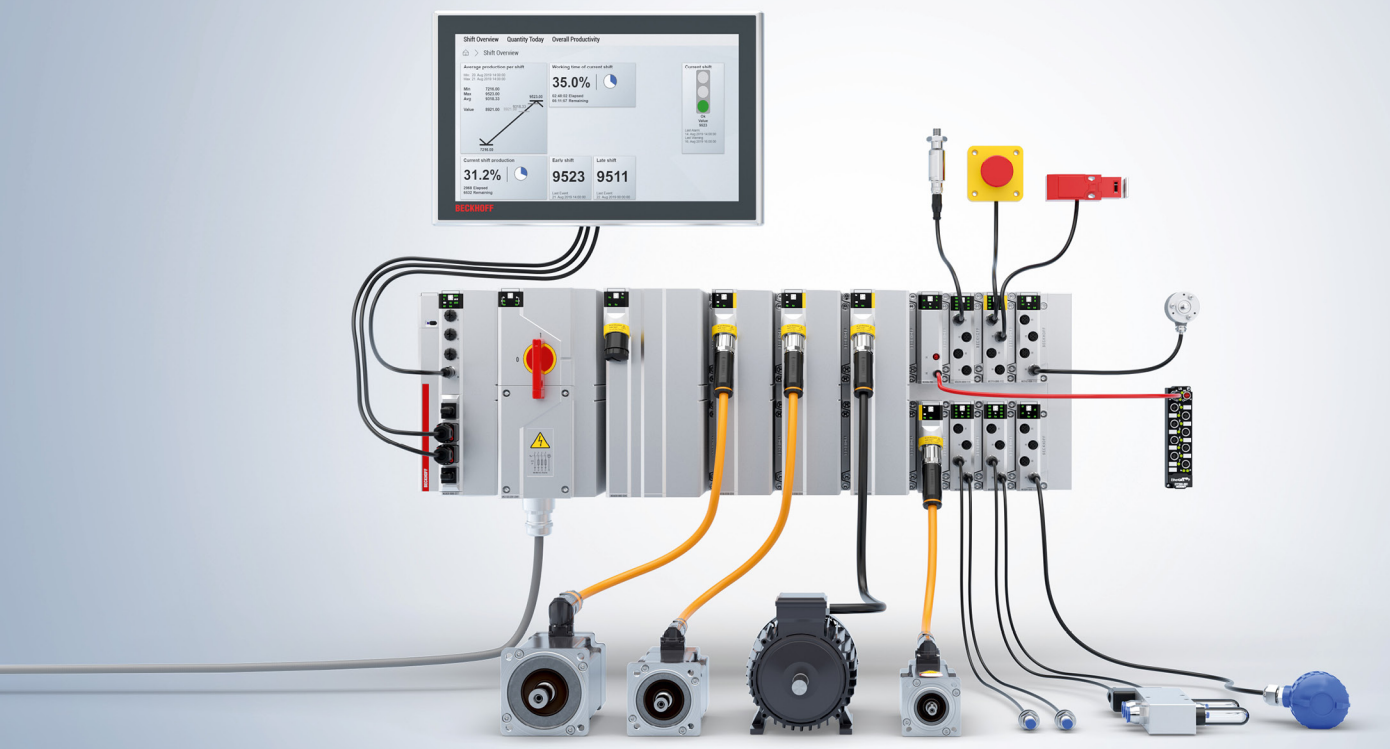

2026-05-20 | Version: 1.0

Table of contents

1 Foreword ... 5
1.1 Notes on the documentation ... 5
1.2 For your safety ... 6
1.3 Intended use ... 7
2 Product overview ... 8
2.1 Product functions ... 10
2.2 Delivery state ... 11
2.3 Block diagram ... 12
2.4 Type key ... 13
2.5 Status display ... 14
2.6 Dimensions ... 15
3 Technical data ... 16
4 Software functions ... 17
5 Mechanical installation ... 18
5.1 Preparation ... 18
5.2 Placement of the module on the baseplate ... 19
5.3 Mounting the module ... 20
6 Commissioning and operation ... 21
7 Connection ... 22
7.1 Required accessories ... 22
7.2 Principles ... 22
8 Decommissioning ... 24
8.1 Disassembly ... 24
8.2 Disposal ... 24
9 Appendix ... 25
9.1 CoE parameters ... 25
9.2 Manual version history ... 26
9.3 Support and Service ... 27
9.4 Accessories ... 28

1 Foreword

1.1 Notes on the documentation

This description is intended exclusively for trained specialists in control and automation technology who are familiar with the applicable national standards.
The documentation and the following notes and explanations must be complied with when installing and commissioning the components.
The trained specialists must always use the current valid documentation.

The trained specialists must ensure that the application and use of the products described is in line with all safety requirements, including all relevant laws, regulations, guidelines, and standards.

Disclaimer

The documentation has been compiled with care. The products described are, however, constantly under development.
We reserve the right to revise and change the documentation at any time and without notice.
Claims to modify products that have already been supplied may not be made on the basis of the data, diagrams, and descriptions in this documentation.

Trademarks

Beckhoff®, ATRO®, EtherCAT®, EtherCAT G®, EtherCAT G10®, EtherCAT P®, MX-System®, Safety over EtherCAT®, TC/BSD®, TwinCAT®, TwinCAT/BSD®, TwinSAFE®, XFC®, XPlanar®, and XTS® are registered and licensed trademarks of Beckhoff Automation GmbH.
If third parties make use of the designations or trademarks contained in this publication for their own purposes, this could infringe upon the rights of the owners of the said designations.

EtherCAT® is a registered trademark and patented technology, licensed by Beckhoff Automation GmbH, Germany.

Copyright

© Beckhoff Automation GmbH & Co. KG, Germany.
The distribution and reproduction of this document, as well as the use and communication of its contents without express authorization, are prohibited.
Offenders will be held liable for the payment of damages. All rights reserved in the event that a patent, utility model, or design are registered.

Third-party trademarks

Trademarks of third parties may be used in this documentation. You can find the trademark notices here: https://www.beckhoff.com/trademarks.

1.2 For your safety

Safety regulations

Read the following explanations for your safety.
Always observe and follow product-specific safety instructions, which you may find at the appropriate places in this document.

Exclusion of liability

All the components are supplied in particular hardware and software configurations which are appropriate for the application. Modifications to hardware or software configurations other than those described in the documentation are not permitted, and nullify the liability of Beckhoff Automation GmbH & Co. KG.

Personnel qualification

This description is only intended for trained specialists in control, automation, and drive technology who are familiar with the applicable national standards.

Signal words

The signal words used in the documentation are classified below. In order to prevent injury and damage to persons and property, read and follow the safety and warning notices.

Personal injury warnings

⚠ DANGER
Hazard with high risk of death or serious injury.

⚠ WARNING
Hazard with medium risk of death or serious injury.

⚠ CAUTION
There is a low-risk hazard that could result in medium or minor injury.

Warning of damage to property or environment

NOTICE
The environment, equipment, or data may be damaged.

Information on handling the product

This information includes, for example:
recommendations for action, assistance or further information on the product.

1.3 Intended use

Intended use of an MX-System

Application in machines and systems in industrial environments and exclusively inside buildings.

The electrical wiring must be permanent wiring.

Improper use

Improper use is not permitted and will result in the exclusion of liability on the part of Beckhoff Automation GmbH & Co.

2 Product overview

The I/O modules in the MX-System offer a wide choice for all signal types and directions. The MO1008-0000-1111, with eight digital inputs, acquires binary control signals from the process level and transfers them, with electrical isolation, to the controller. The signal state is shown on the display; the signal interface is established via screw-type M8 connectors.

In addition, various diagnostic options and configurable input filters are available for each channel. The short-circuit proof 24 V DC sensor power supply for the M8 connectors is protected by an electronic fuse.

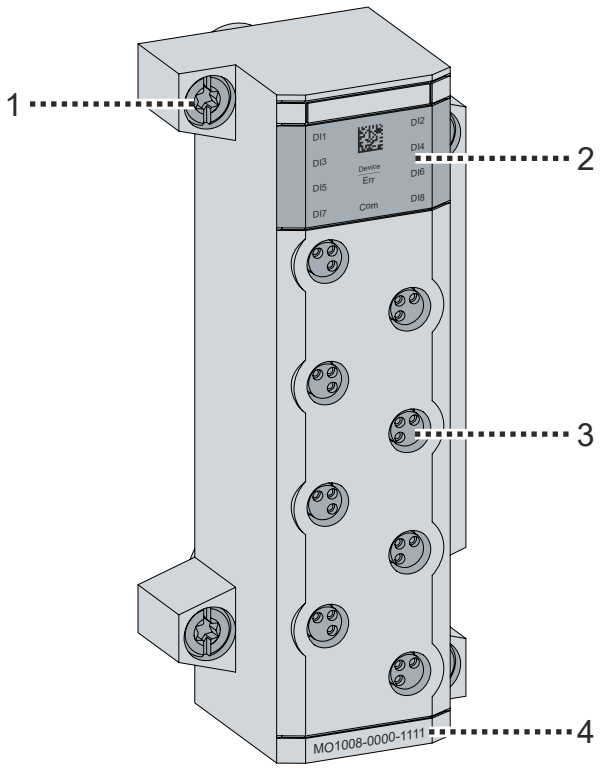

Position	Name
1	Fastening screw, captive, 4 x
2	Status display
3	Digital input, 8 x
4	Module name

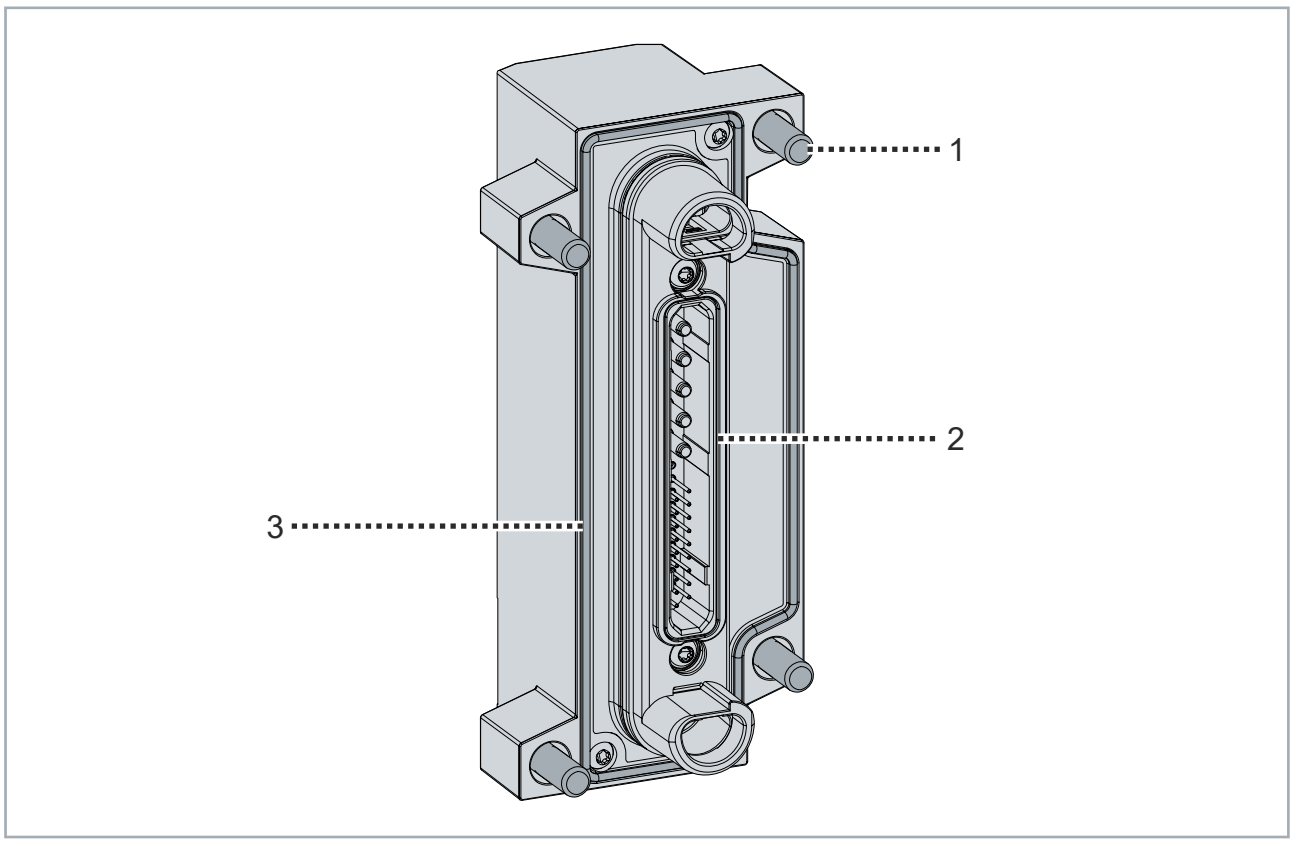

Position	Name
1	Fastening screw, captive, 4 x
2	Data connector
3	Seal

2.1 Product functions

2.1.1 Digital inputs

The digital inputs are current-sinking inputs type 3 in accordance with EN 61131-2. The rated input voltage is 24 V DC.

Each digital input is equipped with an input filter and wire break detection. The filter time of the input filters is adjustable. The wire break detection can be enabled or disabled. It only works for sensors with PNP output.

The current signal level of the individual digital inputs is shown in the status display.

2.1.2 Sensor power supply outputs

There is also a sensor power supply output on each sensor connection. This supplies the connected sensor with 24 V DC from the supply voltage U_B.

The module has a common electronic fuse for all sensor power supply outputs. If a short circuit occurs at a sensor power supply output, the fuse trips and all sensor power supply outputs of the module are shut down.

2.2 Delivery state

This chapter describes the default settings for basic product functions on delivery.

2.2.1 Digital inputs

On delivery, the digital inputs are configured as follows:

- The filter time of the input filter is 3 ms.
- Wire break detection is disabled.

2.3 Block diagram

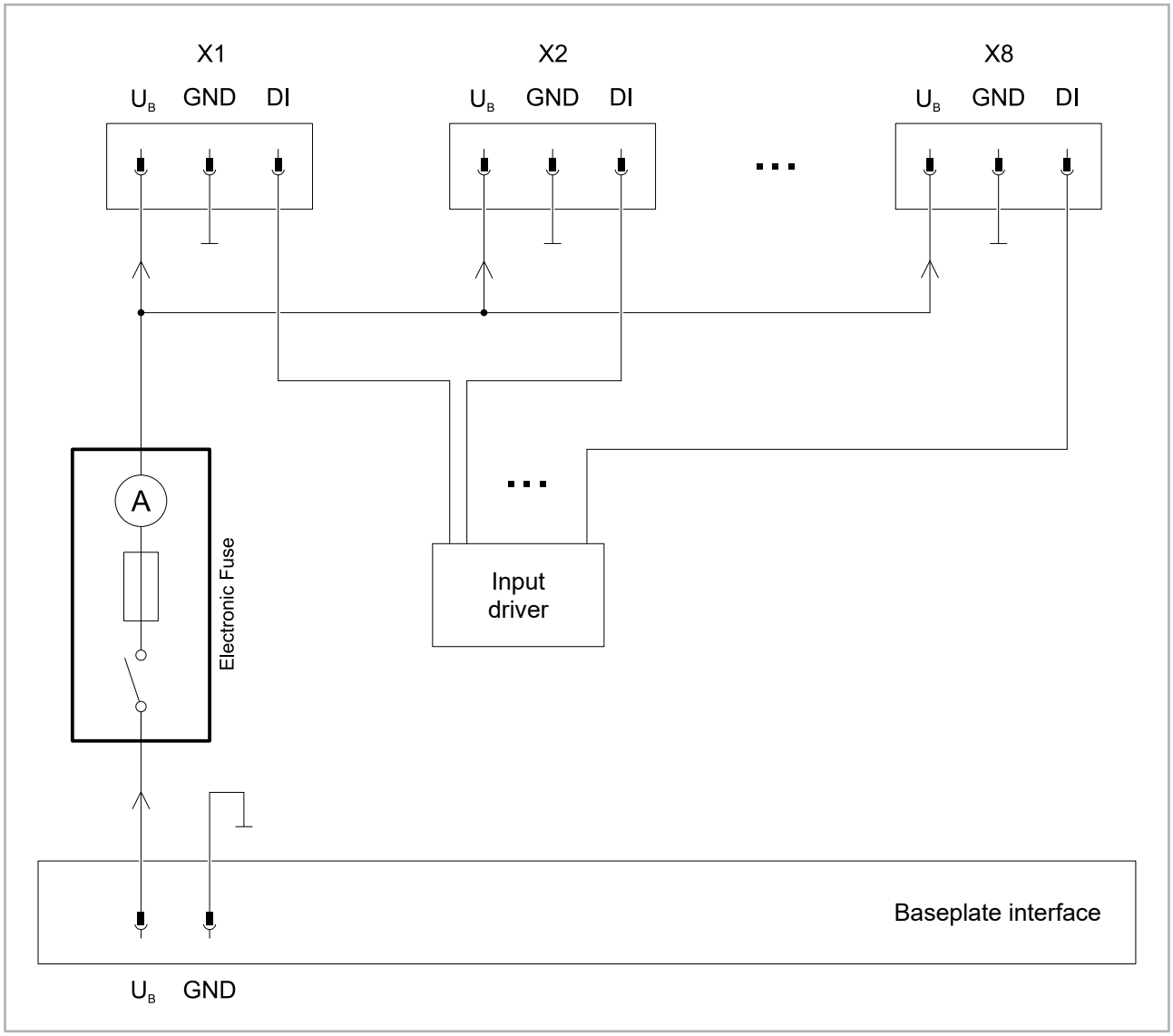

2.4 Type key

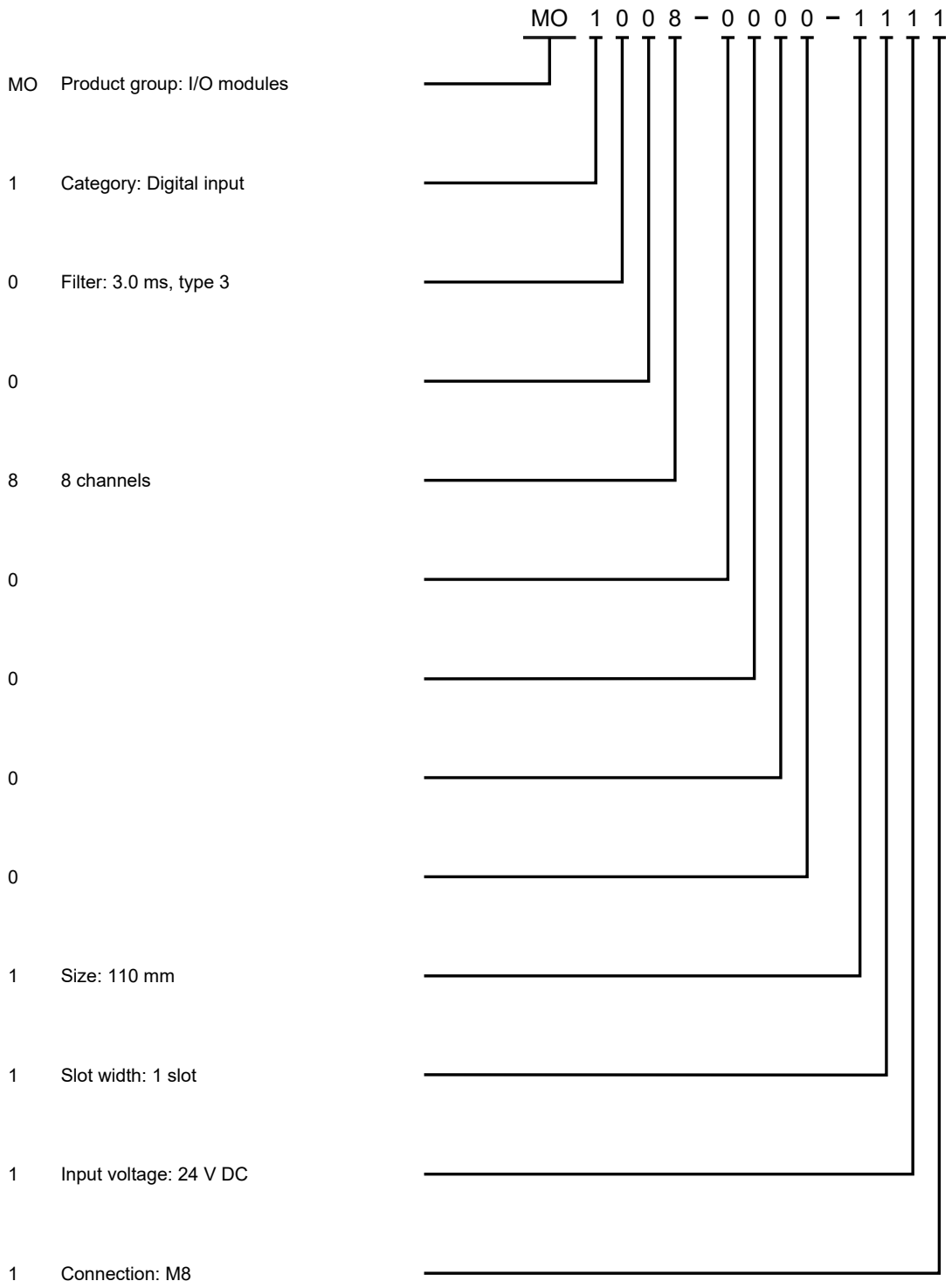
MO 1 0 0 8 – 0 0 0 0 – 1 1 1 1
MO Product group: I/O modules
1 Category: Digital input
0 Filter: 3.0 ms, type 3
0
8 8 channels
0
0
0
0
1 Size: 110 mm
1 Slot width: 1 slot
1 Input voltage: 24 V DC
1 Connection: M8

2.5 Status display

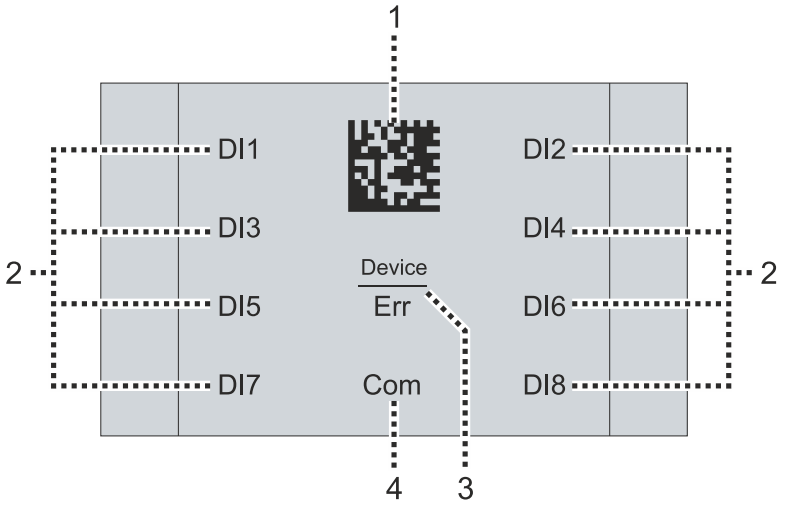

Position	Status display	Status	Explanation
1	-	-	Beckhoff Identification Code as DataMatrix code
2	DI1 … DI8	Green	Indicates that a high level is present at the corresponding digital input.
3	Err	Red	„Error“ This display is linked to the "Error" bit of the integrated electronic fuse for the sensor power supply outputs, see chapter Process Data Objects (PDO).
4	Com	Green	„Communication“ Displays the status of communication to the baseplate. See system manual, chapter "".

2.6 Dimensions

All dimensions in mm

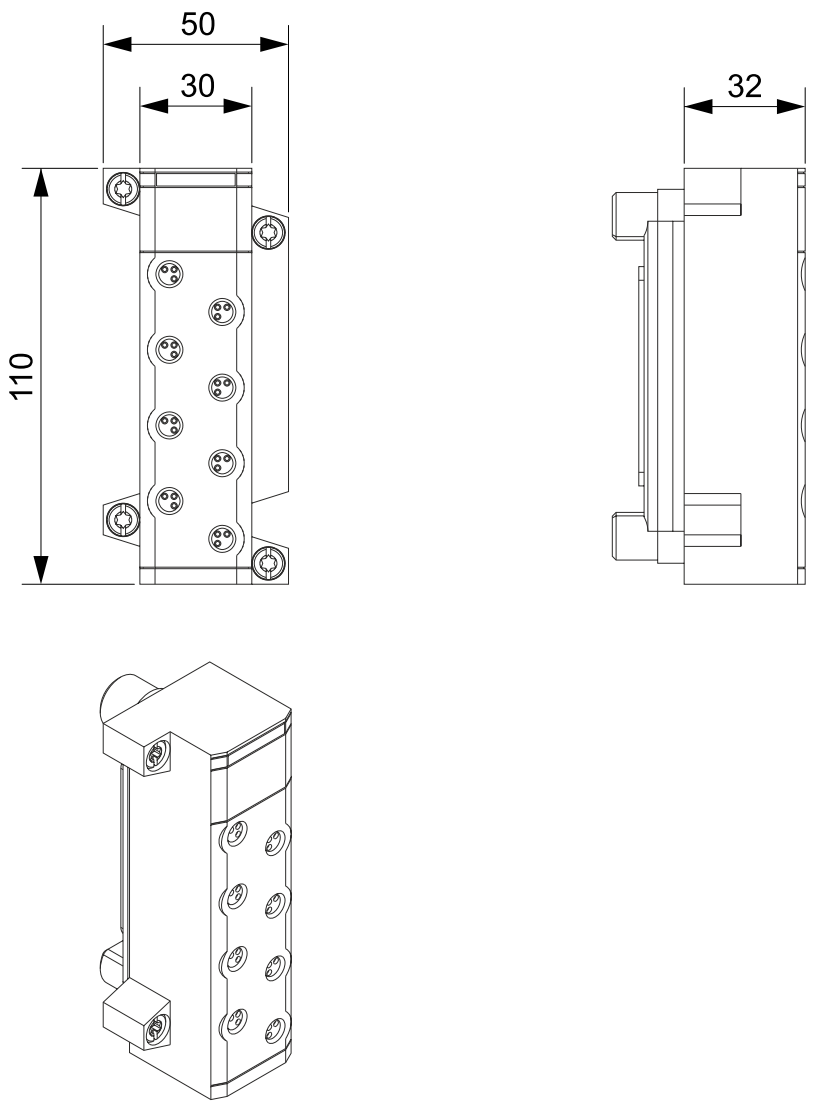

3 Technical data

All values are typical values over the entire temperature range, unless stated otherwise.

Baseplate interface	
Connector	1 data connector
Fieldbus	EtherCAT

Digital inputs	
Number of channels	8
Connection	8 x M8 socket, 3-pin, A-coded
Characteristics	EN61131-2, type 3
Rated input voltage	24 V DC (-15% … +20%)
Max. output current for the entire module	4 A
Max. output current for the sensor power supply for each channel	0.5 A

Housing data	
Width (slots)	1
Height (rows)	1
Dimensions W × H × D	50 mm × 110 mm × 32 mm 50 mm × 110 mm × 32 mm (housing only)
Material	Zinc die-cast and aluminum die-cast
Cooling	Convection
Weight	-
Installation position	Vertical. See system manual, chapter "Installation conditions".

Environmental conditions	
Operating temperature	0 … 50 °C
Storage temperature	-25 … +60 °C
Air humidity	95 %, no condensation
Protection rating	IP20 as a separate module
	IP65 / IP67 as part of a fully and correctly assembled MX-System
Pollution degree	2
Overvoltage category	III
Maximum installation altitude	2000 m

Standards, approvals	
Device safety	conforms to EN 61010-2-201
EMC immunity/emission	conforms to EN IEC 61000-6-2 / EN IEC 61000-6-4
Vibration/shock resistance	conforms to EN 60068-2-6 / EN 60068-2-27
Approvals	CE, UL in preparation

4 Software functions

PDOs

The process data objects (PDOs) can be displayed in TwinCAT for each module.

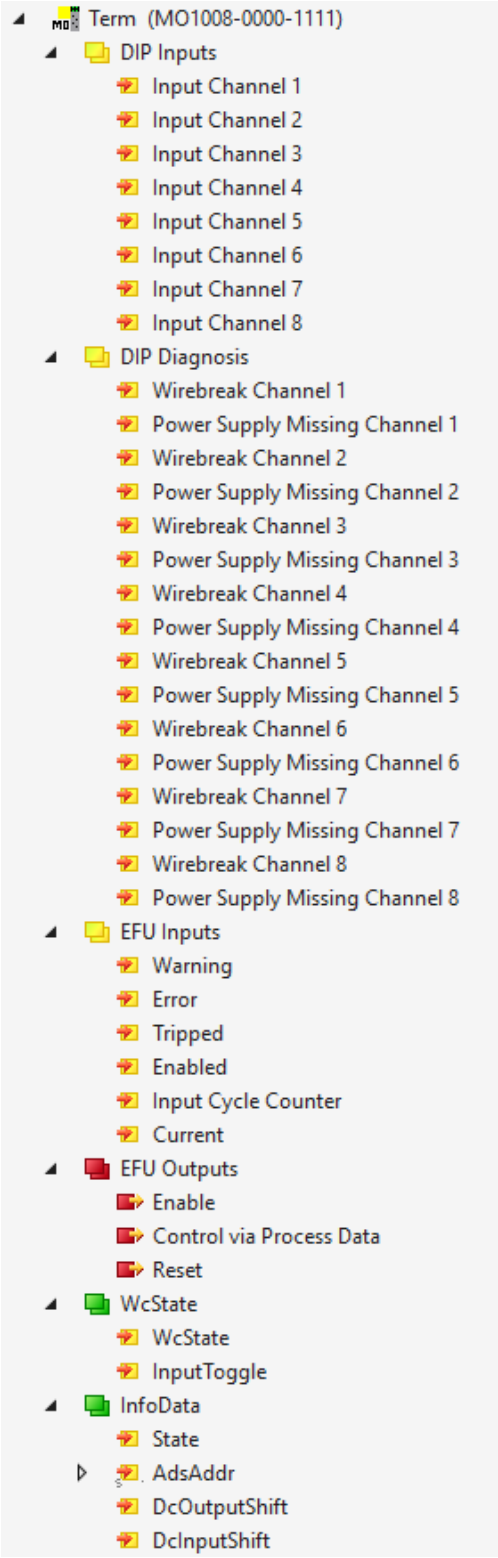

5 Mechanical installation

Required tools

- Torx T25 screwdriver
- Torque wrench 5 Nm

5.1 Preparation

NOTICE

Check the module for damage

If the seal is worn or damaged, liquids and dirt can penetrate and damage the MX-System. The IP65/IP67 protection rating is not met if the seals are worn or damaged.

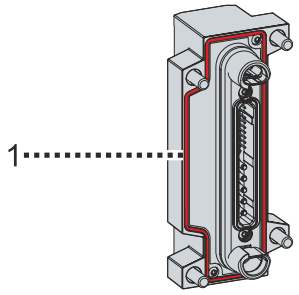

1. Check the seal [1] of the module for wear and damage
2. Replace worn and damaged seals

5.2 Placement of the module on the baseplate

The module can be plugged into the following areas marked in green:

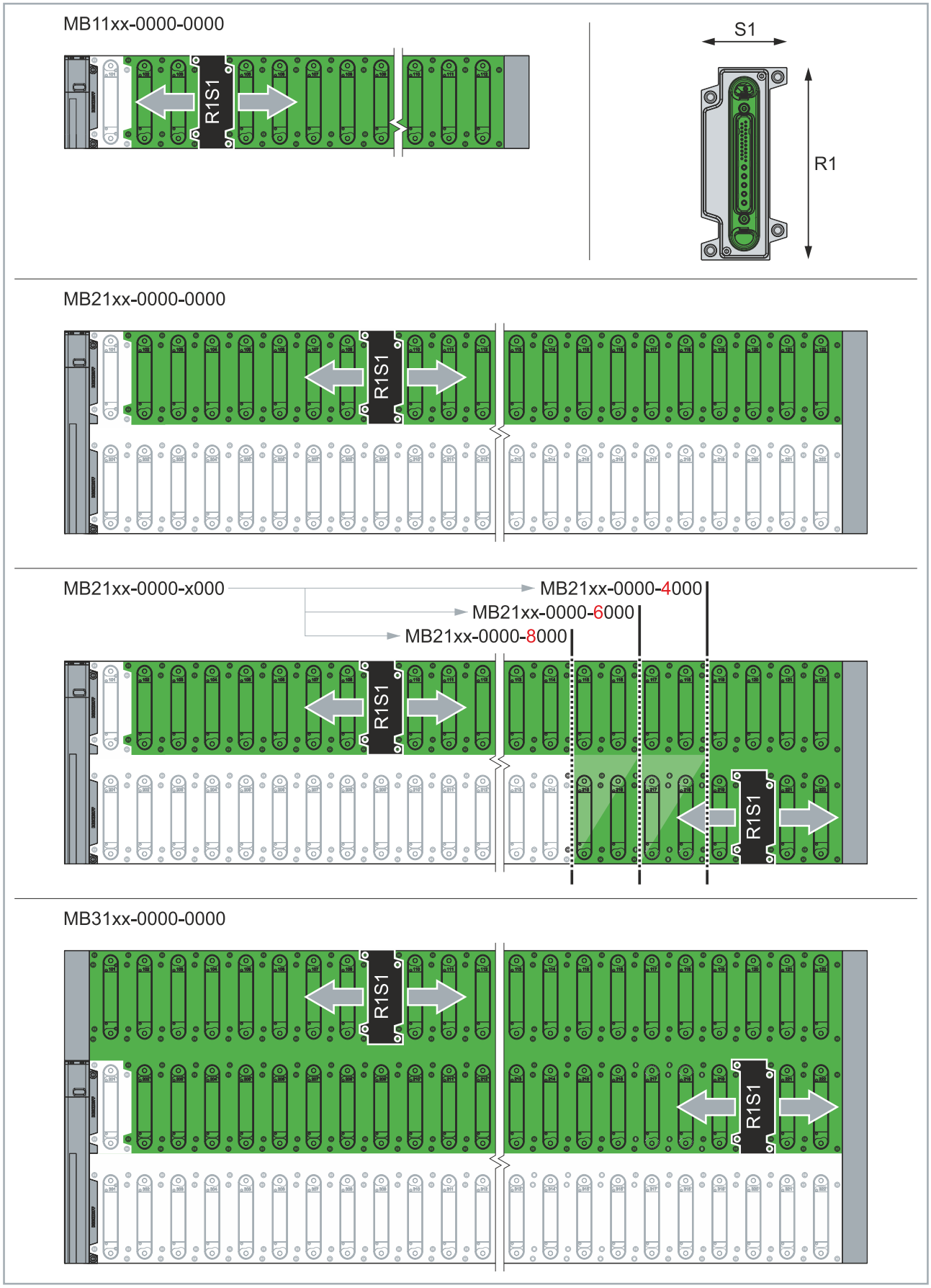

5.3 Mounting the module

⚠ CAUTION

Danger due to the high weight of an equipped baseplate

First mount the baseplate and then the modules to the baseplate. If you mount the modules on the baseplate first, the total weight of the MX-System will increase. Another person is required to transport and assemble an equipped baseplate.

- Wear personal protective equipment.
- The equipped baseplate must be transported and mounted by two people.

NOTICE

Ensure correct installation

If the module is not installed correctly, liquids and dirt may enter and damage the MX-System. The IP65/IP67 protection rating is not met if the installation is incorrect.

NOTICE

Limited number of mating cycles

The module may be plugged in a maximum of 25 times to attach it to the baseplate. If the module is plugged into the baseplate more than 25 times, a secure connection between the module and the baseplate cannot be guaranteed.

- Observe the permissible number of mating cycles.
- Replace the module if the number of mating cycles is exceeded.
- Replace the baseplate if the number of mating cycles is exceeded.

The module can be plugged into any position on a data slot on a baseplate. Slot *101* must not be used.

1. Plug the module on the baseplate
2. Tighten all screws
3. Observe tightening torques:

Components	Tightening torque [Nm]
Screws	5

Further information on installation can be found in the system manual in the "Mounting" chapter.

6 Commissioning and operation

NOTICE

Damage to property due to operation in an unsuitable environment

Before commissioning, ensure that the environmental conditions at the place of commissioning and operation are complied with at all times.

1. Plug the module onto a baseplate.
2. Screw the module onto the baseplate.
3. Wire the module.
4. Switch on the external supply voltage.

7 Connection

NOTICE

Risk of material damage

Failure to observe the following instructions may result in property damage

- Avoid contaminating the connectors before connecting them
- Only connect or disconnect cables when they are de-energized
- Observe the tightening torques
- Close unused connections with protective caps
- Only use cables that are suitable for the expected heating and insulation voltage
- Lay the cables in accordance with the installation requirements of the applicable standards.

7.1 Required accessories

You will need the following accessories for the electrical connection:

Installation material required

- Sensor cables with M8 connector, 3-pin

Required tools

- Torque wrench

7.2 Principles

Tightening torques for connectors

Use a torque wrench to tighten the M8 connectors, e.g. ZB8801 from Beckhoff.

Tighten the M8 connectors to 0.4 Nm.

Protective caps

Cover unused sockets with protective caps.

IP67 protection rating is only guaranteed if plugs are connected to all sockets and unused sockets are covered with protective caps.

7.3 Digital inputs

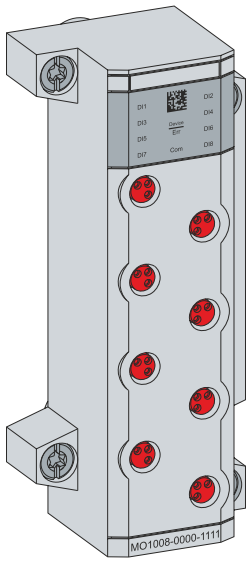

The digital inputs are 3-pin M8 sockets.

Tightening torque: 0.4 Nm

Pin assignment

NOTICE

Do not feed supply voltage output backwards

Material damage due to overcurrent is possible.

M8 connector	Pin	Symbol	Function
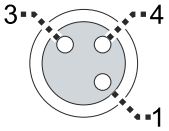	1	U_B	Supply voltage output 24 V DC
	3	GND	Ground
	4	DI	Digital input

8 Decommissioning

8.1 Disassembly

NOTICE

Damage to property due to electrical voltage

Disassembling this module under voltage can lead to material damage.

- Switch off the supply voltage before disassembling.

Disassembly may only be carried out by qualified and trained technical personnel.

✓ The supply voltage is shut down.

1. Remove cables.
2. Loosen all mounting screws of the module.
3. Take the module off the baseplate.

⇨ The module has been removed correctly.

8.2 Disposal

Products marked with a crossed-out wheeled bin shall not be discarded with the normal waste stream. The device is considered as waste electrical and electronic equipment. The national regulations for the disposal of waste electrical and electronic equipment must be observed.

9 Appendix

9.1 CoE parameters

See parameter list in the Beckhoff Information System: Link

9.2 Manual version history

The following table shows the version history of this manual.

Version	Comment
1.0	• First release

9.3 Support and Service

Beckhoff and their partners around the world offer comprehensive support and service, making available fast and competent assistance with all questions related to Beckhoff products and system solutions.

Download finder

Our download finder contains all the files that we offer you for downloading. You will find application reports, technical documentation, technical drawings, configuration files and much more.

The downloads are available in various formats.

Beckhoff's branch offices and representatives

Please contact your Beckhoff branch office or representative for local support and service on Beckhoff products!

The addresses of Beckhoff's branch offices and representatives round the world can be found on our internet page: www.beckhoff.com

You will also find further documentation for Beckhoff components there.

Beckhoff Support

Support offers you comprehensive technical assistance, helping you not only with the application of individual Beckhoff products, but also with other, wide-ranging services:

- support
- design, programming and commissioning of complex automation systems
- and extensive training program for Beckhoff system components

Hotline:	+49 5246 963-157
e-mail:	support@beckhoff.com

Beckhoff Service

The Beckhoff Service Center supports you in all matters of after-sales service:

- on-site service
- repair service
- spare parts service
- hotline service

Hotline:	+49 5246 963-460
e-mail:	service@beckhoff.com

Beckhoff Headquarters

Beckhoff Automation GmbH & Co. KG

Huelshorstweg 20
33415 Verl
Germany

Phone:	+49 5246 963-0
e-mail:	info@beckhoff.com
web:	www.beckhoff.com

9.4 Accessories

Suitable accessories can be found on the product website:

https://www.beckhoff.com/mo1008-0000-1111

Product	Description
ZMX1000-0010	M5x17.5 combi-TX25 replacement screws for module fastening (PU = 10 pcs.)
ZMX3001-0011	1-row, 1-slot replacement seal for module base
ZMX4001-0001	Replacement cover for potential equalization for 1-row baseplate with Beckhoff logo
ZMX4001-0002	Replacement cover for potential equalization for 2- and 3-row baseplate with Beckhoff logo

The following items are also available for replacing worn parts:

MX module base S1R1 with seal

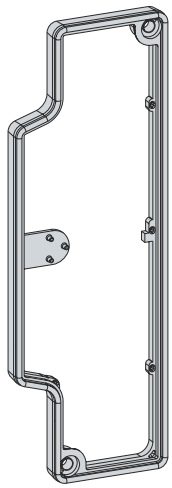

The module base S1R1 with seal is available for replacing worn and damaged seals on a 1-row MX module with one slot.

Trademark statements

Beckhoff®, ATRO®, EtherCAT®, EtherCAT G®, EtherCAT G10®, EtherCAT P®, MX-System®, Safety over EtherCAT®, TC/BSD®, TwinCAT®, TwinCAT/BSD®, TwinSAFE®, XFC®, XPlanar® and XTS® are registered and licensed trademarks of Beckhoff Automation GmbH.

More Information:
www.beckhoff.com/mo1008-0000-1111

Beckhoff Automation GmbH & Co. KG
Hülshorstweg 20
33415 Verl
Germany
Phone: +49 5246 9630
info@beckhoff.com
www.beckhoff.com