BECKHOFF New Automation Technology

Manual | EN

MB3xxx-xxxx-xxxx

Baseplate, 3-row

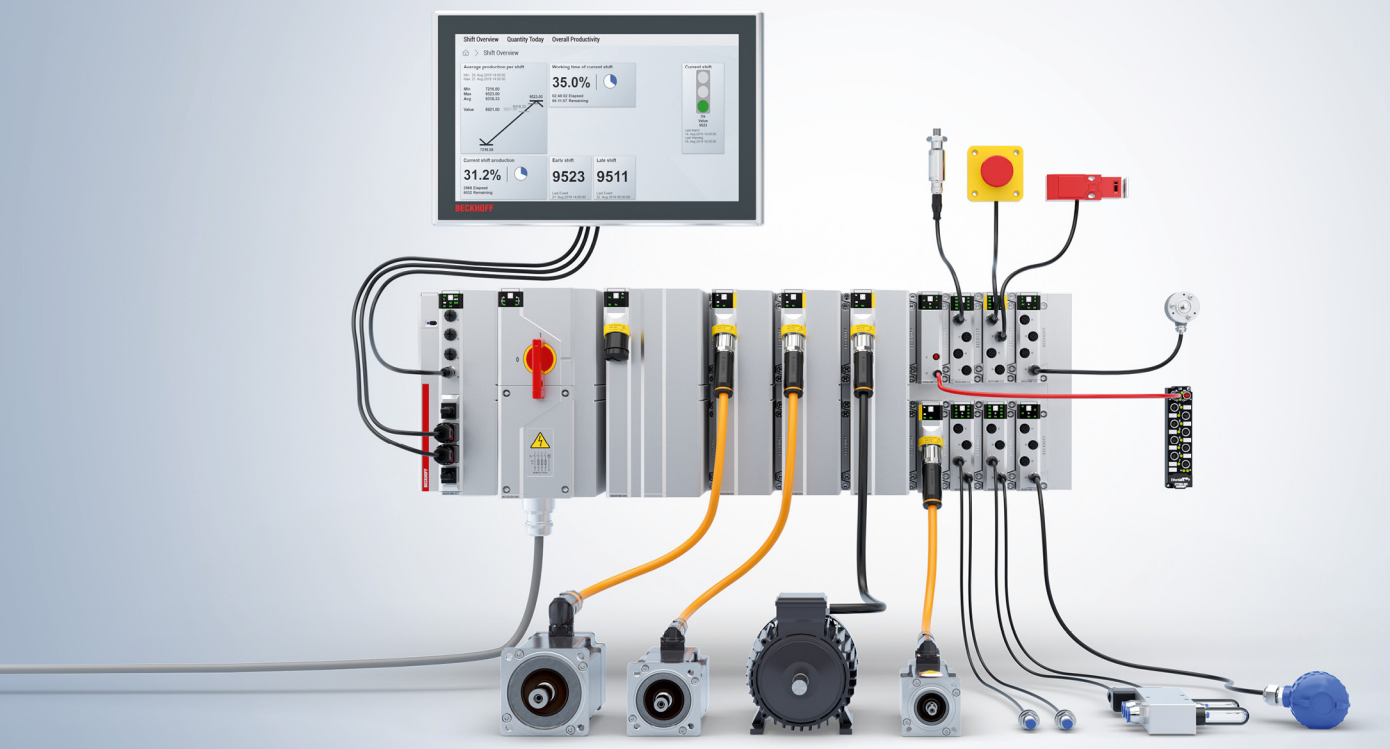

2026-10-14 | Version: 1.0

Table of contents

1 Foreword ... 5
1.1 Notes on the documentation ... 5
1.2 For your safety ... 6
1.3 Intended use ... 7
2 Product overview ... 8
2.1 Product functions ... 9
2.2 Block diagram ... 10
2.3 Type key ... 12
2.4 Dimensions ... 13
3 Technical data ... 14
4 Software functions ... 16
5 Mechanical installation ... 18
5.1 Preparation ... 18
5.2 Mounting the baseplate ... 19
6 Connection ... 20
6.1 Protective earth ... 20
6.2 Data connector ... 23
6.3 Power connector ... 24
7 Commissioning and operation ... 25
8 Decommissioning ... 26
8.1 Disassembly ... 26
8.2 Disposal ... 26
9 Appendix ... 27
9.1 CoE parameters ... 27
9.2 Manual version history ... 27
9.3 Accessories ... 27
9.4 Support and Service ... 28

1 Foreword

1.1 Notes on the documentation

This description is intended exclusively for trained specialists in control and automation technology who are familiar with the applicable national standards.
The documentation and the following notes and explanations must be complied with when installing and commissioning the components.
The trained specialists must always use the current valid documentation.

The trained specialists must ensure that the application and use of the products described is in line with all safety requirements, including all relevant laws, regulations, guidelines, and standards.

Disclaimer

The documentation has been compiled with care. The products described are, however, constantly under development.
We reserve the right to revise and change the documentation at any time and without notice.
Claims to modify products that have already been supplied may not be made on the basis of the data, diagrams, and descriptions in this documentation.

Trademarks

Beckhoff®, ATRO®, EtherCAT®, EtherCAT G®, EtherCAT G10®, EtherCAT P®, MX-System®, Safety over EtherCAT®, TC/BSD®, TwinCAT®, TwinCAT/BSD®, TwinSAFE®, XFC®, XPlanar® and XTS® are registered and licensed trademarks of Beckhoff Automation GmbH.
If third parties make use of the designations or trademarks contained in this publication for their own purposes, this could infringe upon the rights of the owners of the said designations.

EtherCAT® is a registered trademark and patented technology, licensed by Beckhoff Automation GmbH, Germany.

Copyright

© Beckhoff Automation GmbH & Co. KG, Germany.
The distribution and reproduction of this document, as well as the use and communication of its contents without express authorization, are prohibited.
Offenders will be held liable for the payment of damages. All rights reserved in the event that a patent, utility model, or design are registered.

Third-party trademarks

Trademarks of third parties may be used in this documentation. You can find the trademark notices here: https://www.beckhoff.com/trademarks.

1.2 For your safety

Safety regulations

Read the following explanations for your safety.
Always observe and follow product-specific safety instructions, which you may find at the appropriate places in this document.

Exclusion of liability

All the components are supplied in particular hardware and software configurations which are appropriate for the application. Modifications to hardware or software configurations other than those described in the documentation are not permitted, and nullify the liability of Beckhoff Automation GmbH & Co. KG.

Personnel qualification

This description is only intended for trained specialists in control, automation, and drive technology who are familiar with the applicable national standards.

Signal words

The signal words used in the documentation are classified below. In order to prevent injury and damage to persons and property, read and follow the safety and warning notices.

Personal injury warnings

⚠ DANGER
Hazard with high risk of death or serious injury.

⚠ WARNING
Hazard with medium risk of death or serious injury.

⚠ CAUTION
There is a low-risk hazard that could result in medium or minor injury.

Warning of damage to property or environment

NOTICE
The environment, equipment, or data may be damaged.

Information on handling the product

This information includes, for example:
recommendations for action, assistance or further information on the product.

1.3 Intended use

Intended use of an MX-System

Application in machines and systems in industrial environments and exclusively inside buildings.

The electrical wiring must be permanent wiring.

Improper use

Improper use is not permitted and will result in the exclusion of liability on the part of Beckhoff Automation GmbH & Co. KG.

2 Product overview

The 3-row baseplates of the MB2xxx series are available in various lengths and are used to accommodate 1-, 2-, and 3-row function modules. The data connectors provide 24 V DC or 48 V DC and EtherCAT for the connected modules. The power connectors supply 400…480 V AC and up to 848 V DC for the DC link. Equipotential bonding points and an optional diagnostic interface are provided on the baseplate.

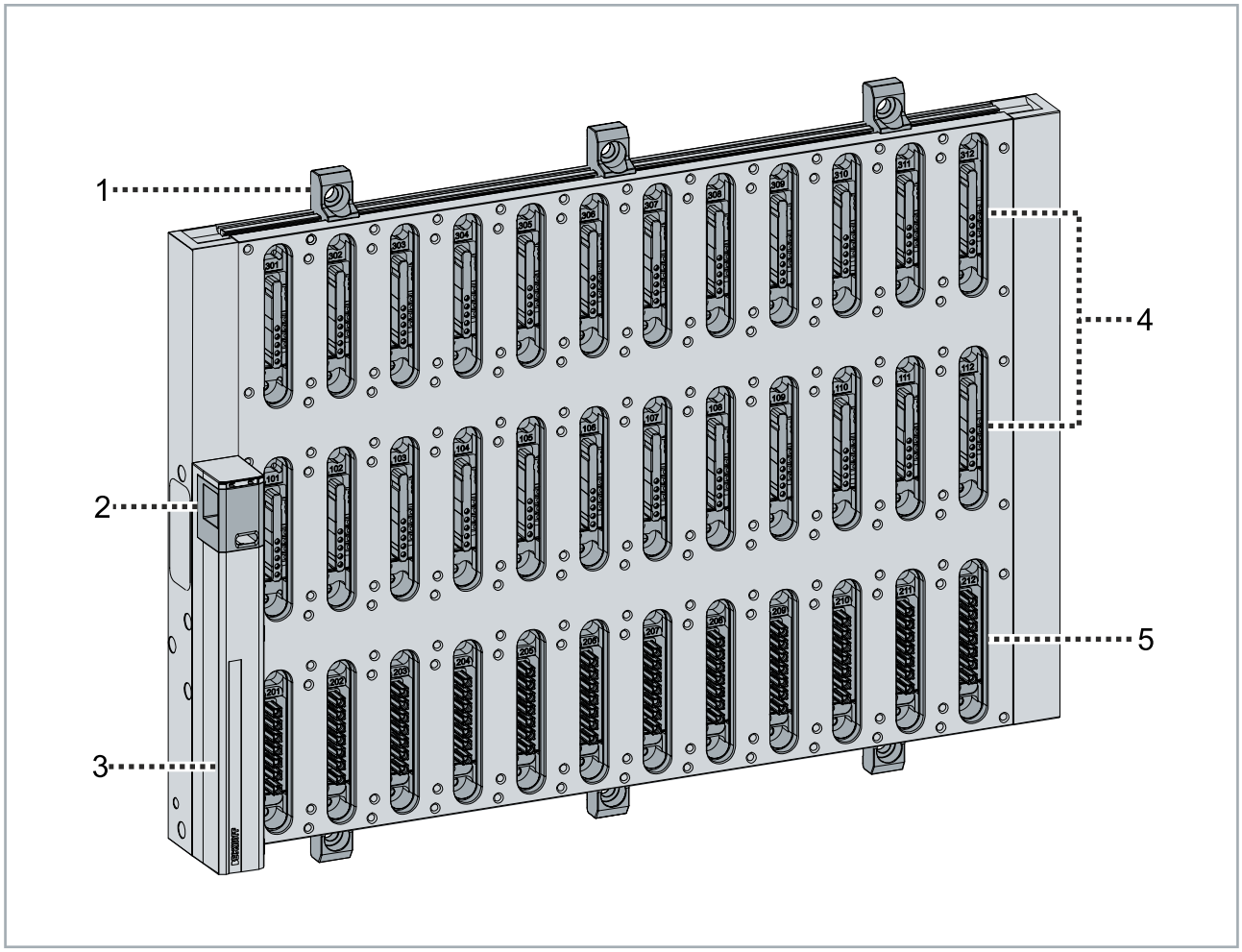

Position	Name
1	Baseplate fasteners | MA5102-0000-0000 (not included)
2	Diagnostic interface: slot for a dongle | MA6060-0000-0000
3	Cover for equipotential bonding
4	Data connector
5	Power connector

2.1 Product functions

Diagnostic interface

The diagnostic interface allows you to connect the dongle (MA6060-0000-0000) for the Diagnostics app and is used for signal forwarding.

Data connector

The data connector is used for forwarding of communication and power signals within the system. It connects the connected components to each other via EtherCAT and simultaneously provides the 24 V DC or 48 V DC supply voltage required for operation, as well as the system-internal E-bus voltage. In addition, the protective conductor is routed through the connector.

Power connector

The power connector is used to supply power within the system. It establishes connections between the connected components and transmits both the three-phase 400/480 V AC power supply with a neutral conductor and the voltages of the DC link up to 848 V DC. In addition, the protective conductor is extended. This ensures safe and efficient energy distribution within the system.

Equipotential bonding points

The equipotential bonding points are used to connect an additional protective conductor using a tubular cable lug. They allow the baseplate to be integrated into the local equipotential bonding system, thereby ensuring a low-resistance connection to the protective conductor potential.

2.2 Block diagram

Electrical block diagram

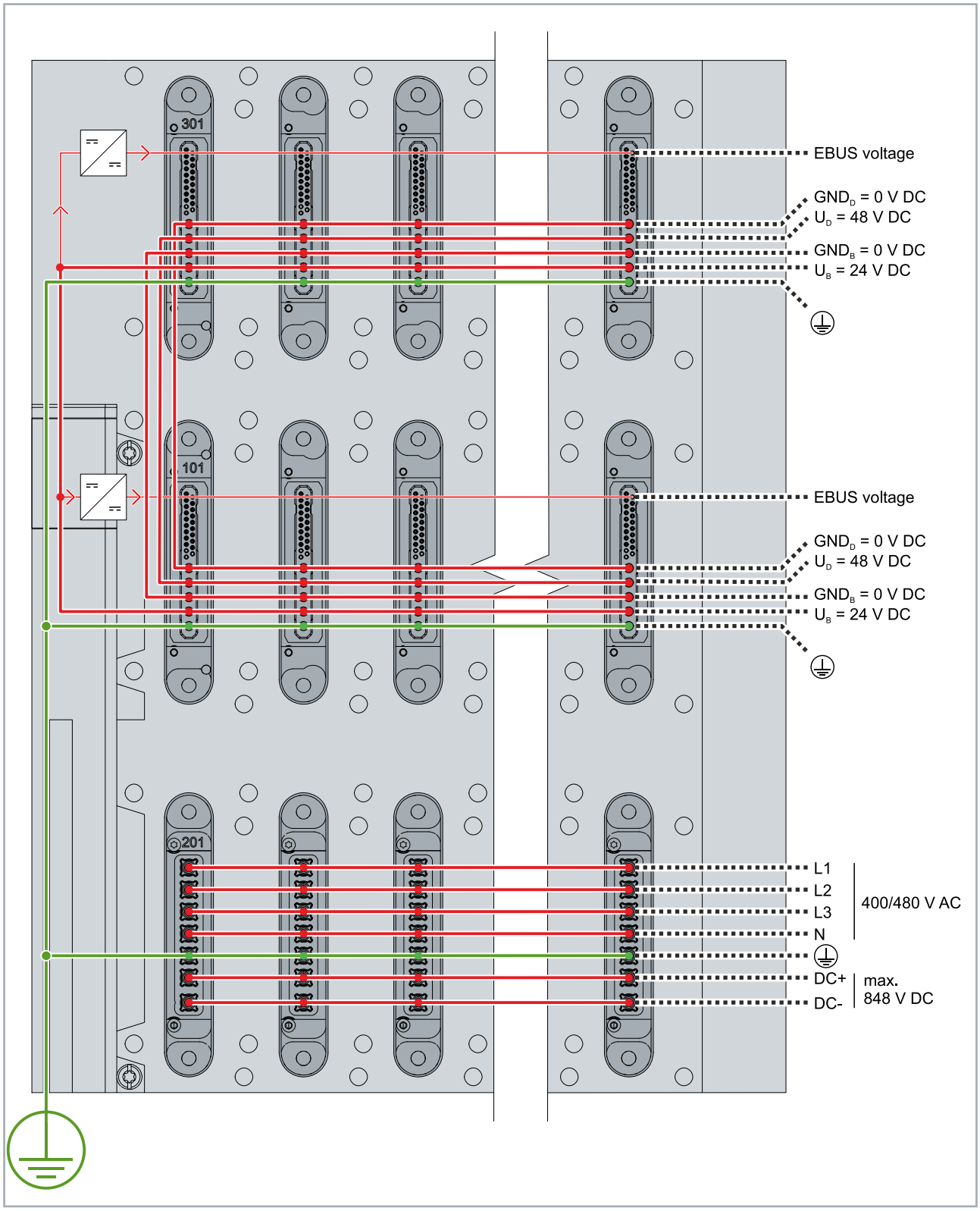

Logical block diagram

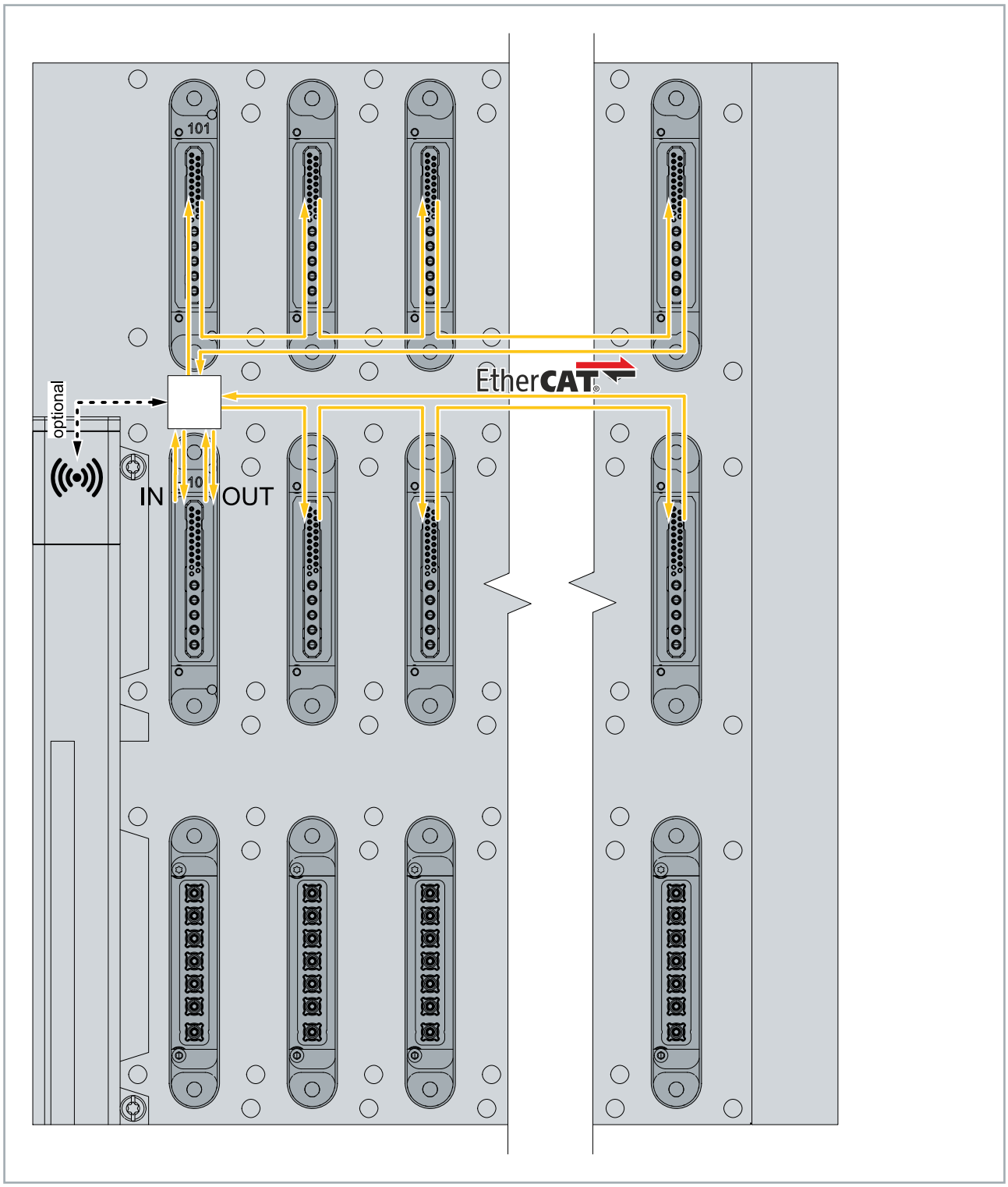

2.3 Type key

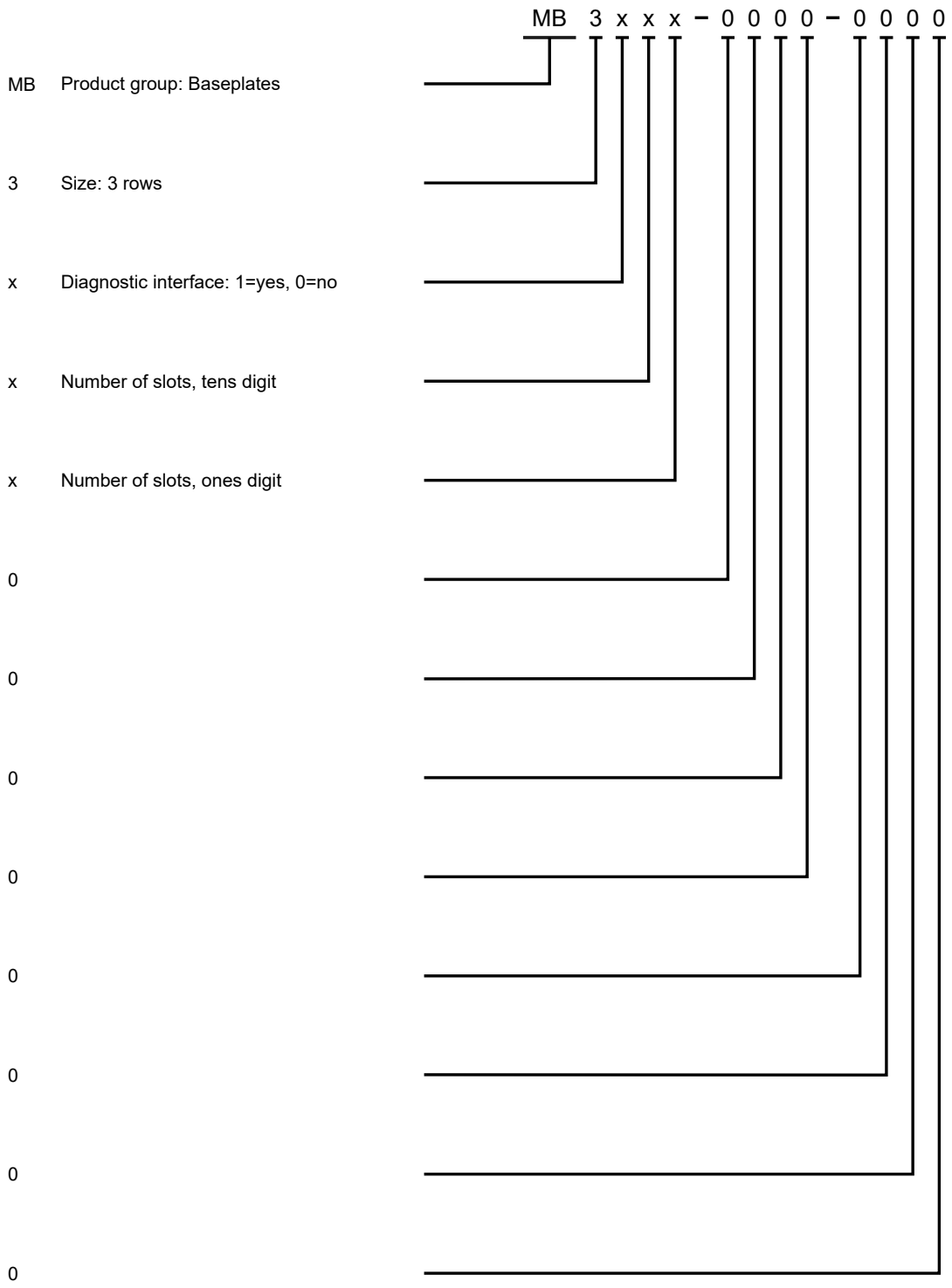
MB 3 x x x – 0 0 0 0 – 0 0 0 0
MB Product group: Baseplates
3 Size: 3 rows
x Diagnostic interface: 1=yes, 0=no
x Number of slots, tens digit
x Number of slots, ones digit
0
0
0
0
0
0
0
0

2.4 Dimensions

All dimensions in mm

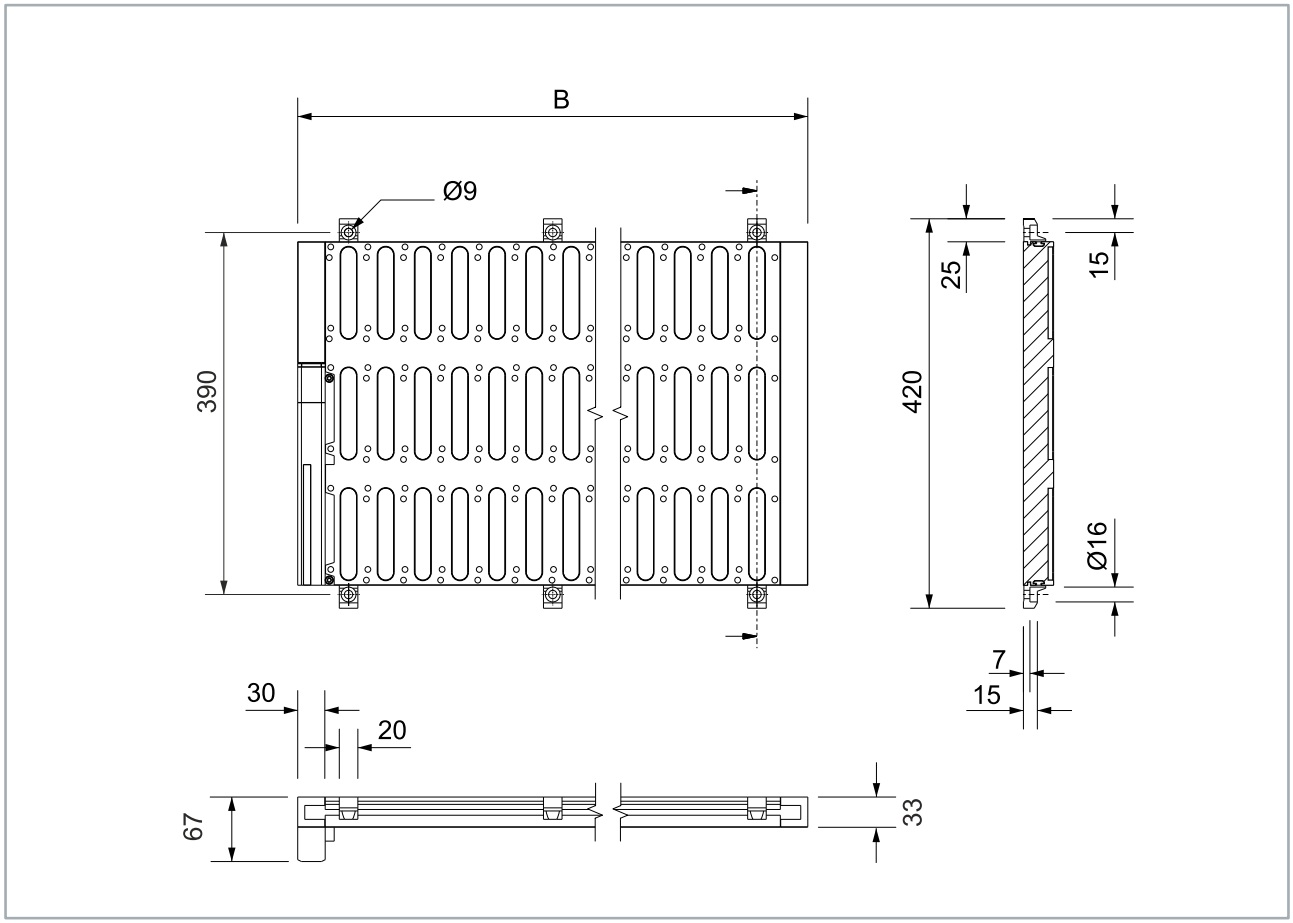

B = 70 mm + n × 40 mm
where n = number of slots per row

Example: for an MB31**12**-0000-0000, n = 12.
B = 70 mm + 12 × 40 mm = 550 mm

3 Technical data

All values are typical values over the entire temperature range, unless stated otherwise.

Data connector	
Existing signals	U_B = 24 V DC U_D = 48 V DC ⏚ EtherCAT internal communication
Rated voltage	U_B = 24 V DC (-15%…+20%) U_D = 48 V DC (-15%…+20%)
Rated current U_B/U_D	20 A per data connector 40 A in total

Power connector	
Existing signals	AC: L1, L2, L3, N DC link ⏚
Rated voltage AC	3~ 230/400 AC 3~ 480Y/277 AC 50…60 Hz
Rated current AC	32 A in total
Rated voltage DC	max. 848 V DC
Rated current DC	40 A in total

Housing data	
Dimensions W x H x D	(70 mm + *n* x 40 mm) x 370 mm x 33 mm (70 mm + *n* × 40 mm) × 370 mm × 66 mm (with cover for equipotential bonding) *n* = Number of slots per row
Material	Aluminum
Cooling	Convection
Weight	*n* x 520 g + 140 g *n* = Number of slots per row
Installation position	Standing horizontally. Equipotential bonding and diagnostic interface on the left. See system manual, chapter “Installation conditions“.

Device safety	
Separation between main and control circuits	Double or reinforced electrical isolation
Protection class	I

Standards, approvals	
Device safety	conforms to EN 61010-2-201
EMC immunity/emission	conforms to EN IEC 61000-6-2/EN IEC 61000-6-4
Vibration/shock resistance	conforms to EN 60068-2-6/EN 60068-2-27
Approvals	CE, $_C$UL$_{US}$

Environmental conditions	
Operating temperature	0 … 50 °C
Storage temperature	-25 … +60 °C
Air humidity	95 %, no condensation
Protection rating	IP20 as a separate module
	IP65 / IP67 as part of a fully and correctly assembled MX-System
Pollution degree	2
Overvoltage category	III
Maximum installation altitude	2000 m

4 Software functions

Software functions are the functions of a module's firmware that a controller can access via EtherCAT.

Functionality

The following descriptions document the full range of software functions at the time of publication of this manual. The range of functions that can actually be used depends on the firmware version of a module.

Process data objects

Process Data Objects (PDOs) are used for the cyclic transmission of process data between EtherCAT master and EtherCAT slave. The data is exchanged at fixed intervals as part of the real-time cycle and serves as the basis for control and monitoring of field devices. PDOs typically contain input and output data required for the direct operation of a device. Cyclic transfer ensures a continuous and deterministic data exchange.

Diagnostic interface display

In TwinCAT, the diagnostic interface is displayed as Terminal 2 (MB1100-0002) for each baseplate.

Inputs Profile BTG Inputs

Variable		Type	Description
Status		Status_0D96A330	
	Dongle Present	BIT	0 = There is no Bluetooth® dongle. 1 = A Bluetooth® dongle is present.
	Bluetooth Enabled	BIT	0 = Bluetooth® diagnostics are not enabled. 1 = Bluetooth® diagnostics are enabled.
	Pairing Active	BIT	0 = Waiting for Bluetooth® connection is not active. 1 = Waiting for Bluetooth® connection is active.
	Connected	BIT	0 = No device has a Bluetooth® connection. 1 = A device has a Bluetooth® connection.
	Diag	BIT	0 = There are no new diagnostic messages. 1= There are new diagnostic messages.
	Input Cycle Counter	BIT2	A 2-bit counter that increments when the TxPDO data is updated.

Outputs Profile BTG Outputs

Variable		Type	Description
Control		Control_93232619	
	Enable Bluetooth	BIT	0 = The Bluetooth® diagnostic feature is not enabled. 1 = Bluetooth® diagnostic feature is enabled.
	Activate Pairing	BIT	0 = The module has not been set to Bluetooth® pairing mode. 1 = The module is in Bluetooth® pairing mode.

WcState

WcState Indicates whether an EtherCAT slave correctly participated in the cyclic process data exchange during the last bus cycle.

Variable	Type	Description
WcState	BIT	0 = data is valid 1 = data is invalid
InputToggle	BIT	A 1-bit counter that increments after each cycle

InfoData

InfoData Indicates which diagnostic and status information an EtherCAT slave provides.

Variable		Type	Description
State		UINT	0x___1 = EtherCAT slave in INIT state 0x___2 = EtherCAT slave in PREOP state 0x___3 = EtherCAT slave in BOOT state 0x___4 = EtherCAT slave in SAFEOP state 0x___8 = EtherCAT slave in OP state 0x001_ = EtherCAT slave reports an error 0x002_ = Invalid vendor ID, product code x read 0x004_ = Initialization error occurred 0x008_ = EtherCAT slave disabled 0x010 = EtherCAT slave not present 0x020_ = EtherCAT slave reports a connection error 0x040_ = EtherCAT slave reports no connection 0x080_ = EtherCAT slave reports an unexpected connection 0x100_ = Communication Port A 0x200_ = Communication Port B 0x400_ = Communication Port C 0x800_ = Communication Port D
AdsAddr		AMSADDR	Full ADS address for accessing the EtherCAT slave (mailbox)
	netId	AMSNETID	unique network address
	port	WORD	Internal ADS port number of the EtherCAT device
AoeNetId		AMSNETID	The EtherCAT slave contains an ADS router with this NetId.

5 Mechanical installation

5.1 Preparation

1. Ensure that the mounting point meets the following requirements:
   - The mounting point must be strong enough to support the weight of the fitted baseplate.
   - Any flat mounting point must not heat up the baseplate.
   - The mounting point should not vibrate if possible.
2. Plan the bolted connection in accordance with applicable standards.
3. Determine the installation sequence.
   - First mount the baseplate, then fit the modules (recommended).
   - First fit the modules on the baseplate, then mount the baseplate (high weight).
4. Observe the minimum distances and the prescribed installation position.
   All dimensions in mm

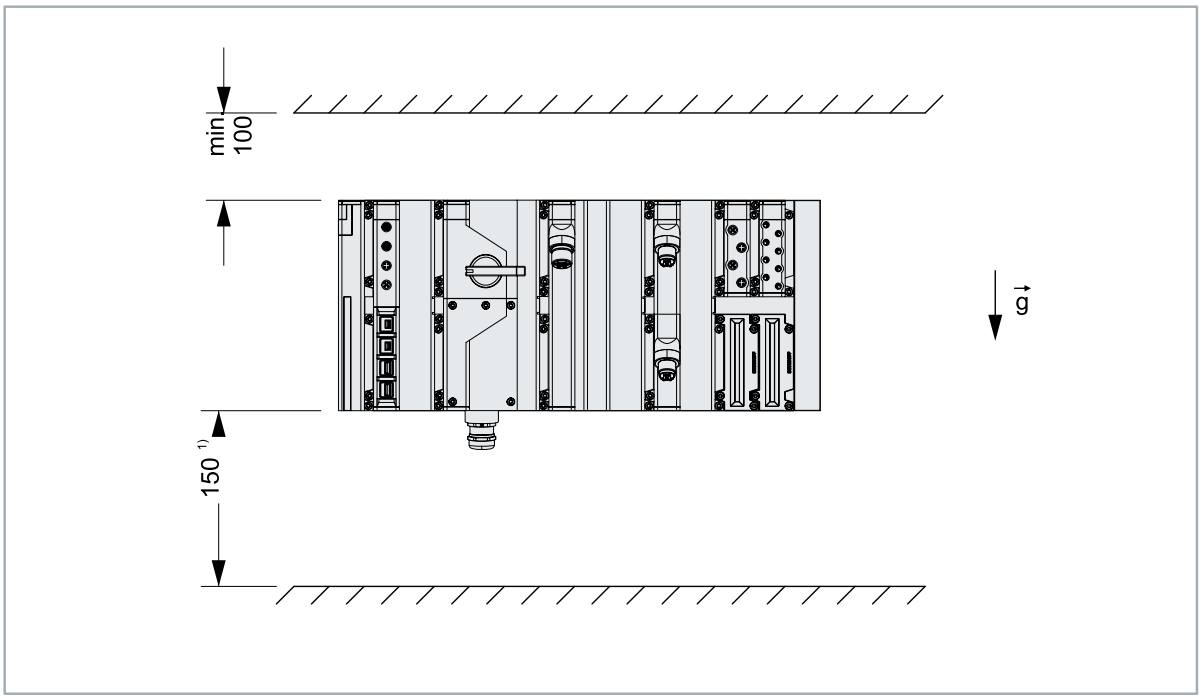

[1] Recommended minimum value.

5. Provide one cover for each unused slot.
6. Calculate the number of fasteners required | MA5102-0000-0000 using the following formula:

$$n_{ma5102} = \frac{n_{slots}}{6} + 1$$

n_{ma5102}: Number of fasteners required per groove (round non-integer values up to the nearest whole number)

n_{slots}: Number of slots per row

Example of a baseplate with ten slots per row:

$$n_{ma5102} = \frac{10}{6} + 1 = 2,67 \rightarrow 3$$

Result: Three fasteners are needed per groove, for a total of six. The mounting hardware is sold in packs of two, which means that three packs are sufficient for a baseplate with ten slots.

5.2 Mounting the baseplate

Required installation material

- Baseplate fasteners | MA5102-0000-0000
- Covers for a slot | MA9100-0000-1100
- Fastening material

You can find the required installation materials on the product website:

https://www.beckhoff.com/Further-accessories/

⚠ CAUTION

Danger due to the high weight of an equipped baseplate

First mount the baseplate and then the modules to the baseplate. If you mount the modules on the baseplate first, the total weight of the MX-System will increase. Another person is required to transport and install an equipped baseplate.

- Wear personal protective equipment.
- The equipped baseplate must be transported and mounted by two people.

1. Attach all fasteners to the baseplate.
2. Screw each fastener into place using one mounting screw per fastener.
3. Mounting the modules on the baseplate.
4. Close all unused slots with covers.

NOTICE

Lack of IP protection

If the MA6060-0000-0000 dongle is not inserted, the corresponding slot must be covered. To do this, install the ZMX4001-0003 cover as it came from the factory. The IP65/IP67 protection rating will not be met if the slot is not properly sealed.

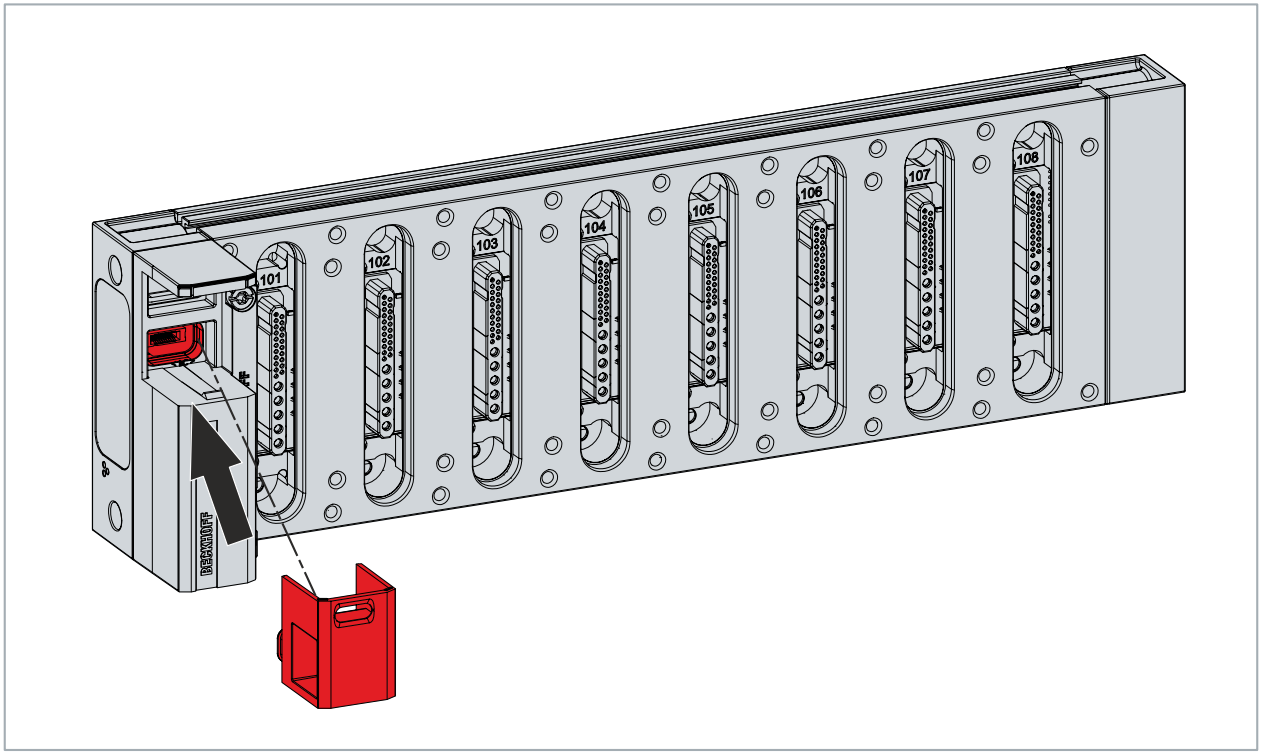

6 Connection

NOTICE

PELV voltage source

The baseplate must be powered by a PELV voltage source.

6.1 Protective earth

Taking into account all possible applications, configurations, and connection options of the MX-System, the MX-System must always be connected to the protective equipotential bonding of the machine or system via a separate second protective conductor (PE), in addition to the protective conductor of the power supply line.

The cross-section of the additional protective conductor must be at least equal to that of the protective conductor in the power supply line. For protective conductor cross-sections of 16 mm² (AWG 5) Cu or larger, a cross-section of 16 mm² (AWG 5) Cu is sufficient for the additional protective conductor.

If multiple MX-System baseplates are used within a machine or system, each baseplate must be connected to the protective equipotential bonding via an additional PE connection.

The additional protective conductors for the individual baseplates can either be routed separately from a central protective equipotential bonding point on the machine or system to the respective baseplates, or they can be distributed via the first baseplate. In this case, the additional PE terminal on the first baseplate serves as the star point for the protective conductor connections to the other baseplates.

Avoid connecting the protective conductors from baseplate to baseplate in a simple series connection. The additional baseplates are connected in a star configuration, so that the protective conductor connection of one baseplate does not depend on the connection of another baseplate.

This specification takes into account the requirements for protective conductor connections, increased leakage currents, and a permanently reliable protective conductor connection in accordance with EN 60204-1, as well as the corresponding requirements for North American applications in accordance with UL 508A and NFPA 79.

6.1.1 Installation of the additional protective conductor

⚠ CAUTION

Danger from life-threatening voltage

Disconnect the system from the supply voltage before you begin disassembly.

⚠ WARNING

Danger to life due to electric shock

After disconnecting from the supply voltage, a life-threatening voltage is still present at the contacts of the DC link voltage. Touching the contacts can lead to death or injury from electric shock.

- After disconnecting from the supply network, wait 10 minutes before starting disassembly.

NOTICE

The baseplates shown below are provided as examples. The installation of the additional protective conductor applies to all types of baseplates.

Required accessories

- Torx T25 screwdriver
- M6 tubular cable lug

1. Loosen the mounting screws of the cover.

2. Remove the cover from the baseplate.

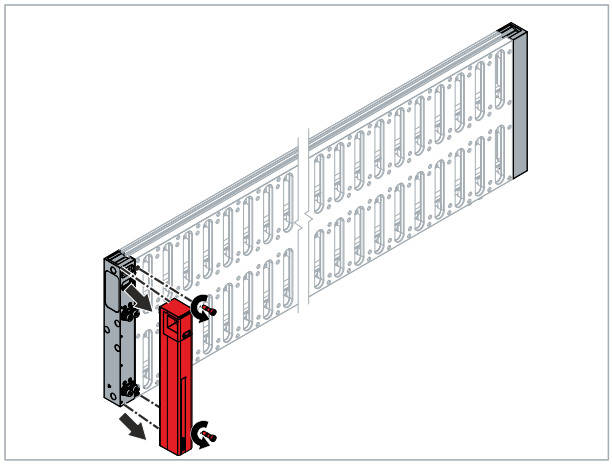

3. Loosen the screw [1] and remove it from the baseplate. Remove the spring washer [2] and the upper washer [3] from the baseplate. Place the tubular cable lug [4] on the lower washer [5]. Place the upper washer [3] and the spring washer [2] in position. Reinstall the screw [1] and tighten it to a torque of 8 Nm + 1 Nm.

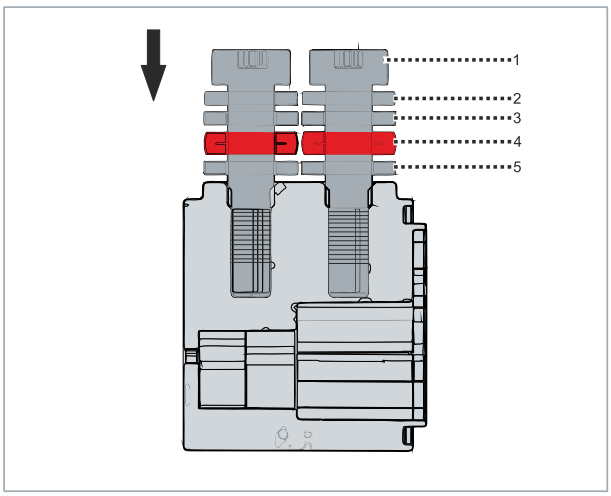

Position	Name
1	M6x16 screw (included in scope of supply)
2	M6 spring washer (included in scope of supply)
3	M6 washer (included in scope of supply)
4	M6 tubular cable lug
5	M6 washer (included in scope of supply)

4. Place the cover back onto the baseplate.

5. Tighten the mounting screws to a torque of 3 Nm.

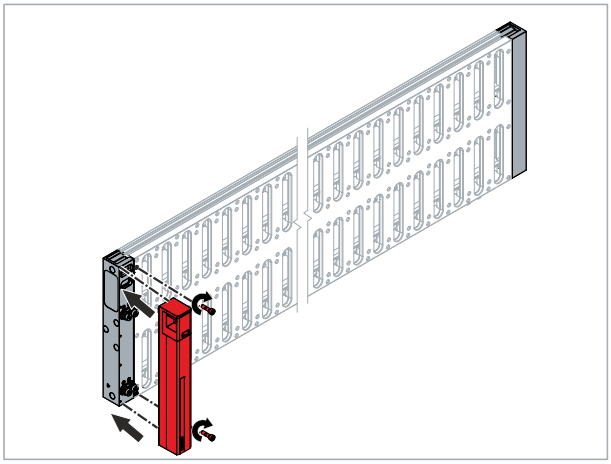

For a description of the protective conductor configuration when using a combination of multiple baseplates, see the System Manual, chapter "Grounding an MX-System."

6.2 Data connector

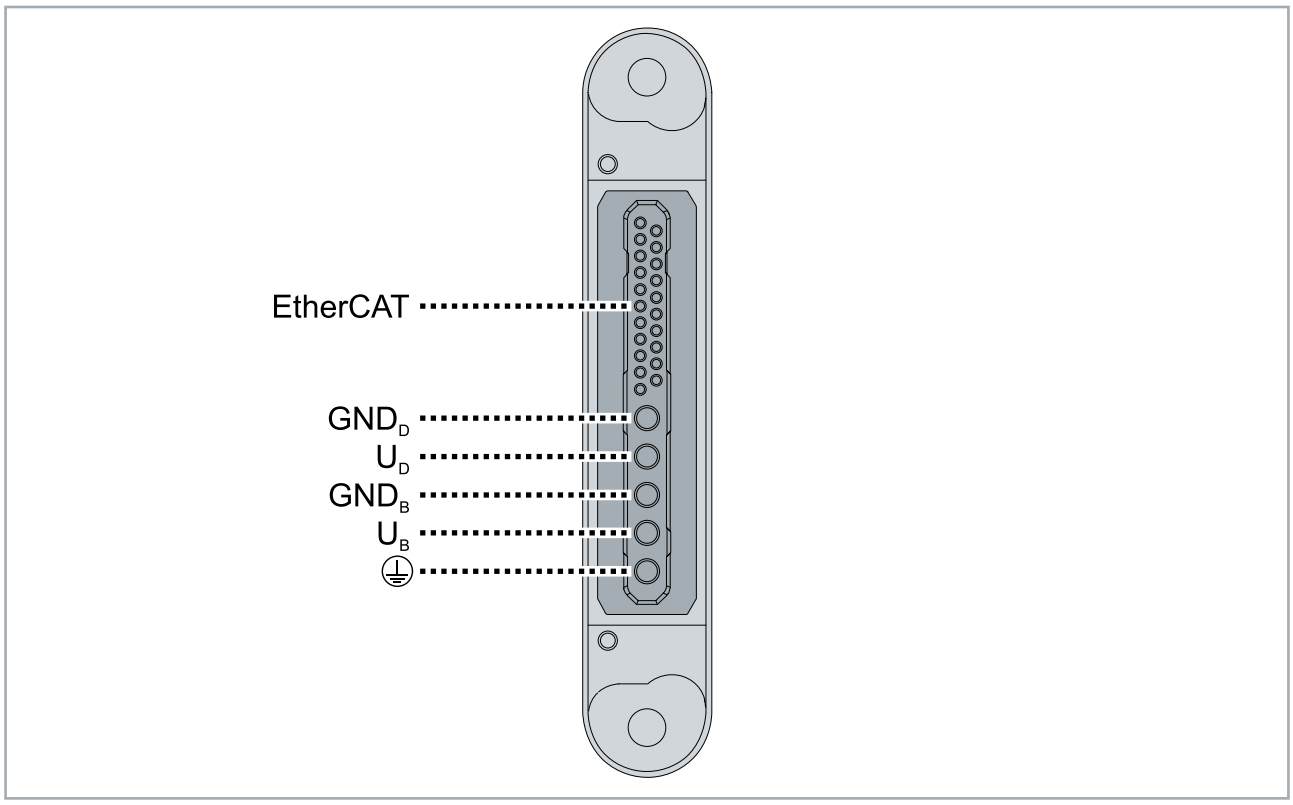

Name	Voltage
GND$_D$	0 V
U$_D$	48 V DC
GND$_B$	0 V
U$_B$	24 V DC
⏚	--

6.3 Power connector

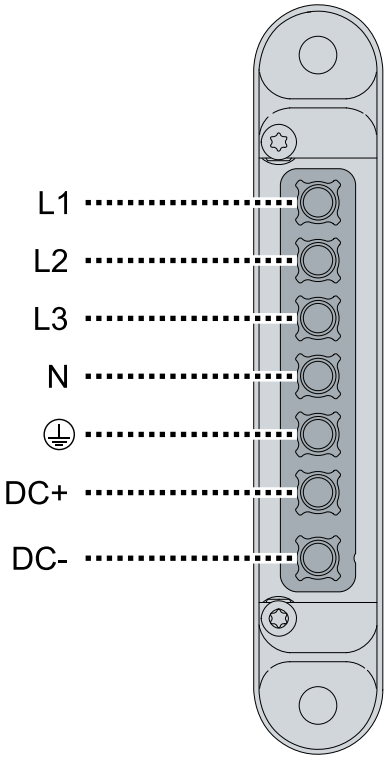

Name	Voltage
L1	400/480 V AC
L2	
L3	
N	
⏚	--
DC+	max. 848 V DC
DC-	+/- 424 V DC symmetrical around PE

7 Commissioning and operation

⚠ CAUTION

Danger to life if operated without protective earth

Without protective earth, the baseplate and the module housings may be live in the event of a fault. Death or serious injury is possible.

- Ground the baseplate before commissioning the MX-System. See chapter Protective earth [▶ 20].

NOTICE

Danger if operated in an unsuitable environment

Material damage is possible.

- Before commissioning, ensure that the environmental conditions at the place of commissioning and operation are complied with at all times. See environmental conditions in the chapter Technical data [▶ 14].

1. Attach all fasteners to the baseplate.
2. Screw each fastener into place using one mounting screw per fastener.
3. Mounting the modules on the baseplate.
4. Close all unused slots with covers.

8 Decommissioning

8.1 Disassembly

⚠ WARNING

Danger to life due to electric shock

After disconnecting from the supply network, a life-threatening voltage is still present at the contacts of the DC link voltage.

- After disconnecting from the supply network, wait 10 minutes before starting disassembly.

⚠ CAUTION

Danger due to the high weight of an equipped baseplate

First, disassemble the modules attached to the baseplate. Removing the modules reduces the total weight of the MX-System. Due to its heavy weight, a fully assembled baseplate can only be disassembled and transported with the help of a second person.

- Wear personal protective equipment.
- Only disassemble and transport the assembled baseplate with additional support.

1. Remove all covers from the unused slots.
2. Remove all modules from the baseplate.
3. Loosen the mounting screw for each fastener at its mounting point.
4. Remove all fasteners from the baseplate.

8.2 Disposal

Products marked with a crossed-out wheeled bin shall not be discarded with the normal waste stream. The device is considered as waste electrical and electronic equipment. The national regulations for the disposal of waste electrical and electronic equipment must be observed.

9 Appendix

9.1 CoE parameters

CoE parameters (CANopen over EtherCAT) describe the configuration values and settings of an EtherCAT device. They are organized as entries in the device's object directory and are used for parameterization, commissioning, and diagnostics. CoE parameters are accessed acyclically, that is, independently of the real-time cycle, by reading and writing the corresponding objects. This allows devices to be flexibly configured and adapted to the specific application.

See parameter list in the Beckhoff Information System: Link

9.2 Manual version history

The following table shows the version history of this manual.

Version	Comment
1.0	• First release
0.1	• First preliminary version

9.3 Accessories

Suitable accessories can be found on the product website:

https://www.beckhoff.com/MBxxxx

Product	Description
ZMX4001-0002	Replacement cover for potential equalization for 2- and 3-row baseplate with Beckhoff logo
ZMX4001-0003	Replacement cover for MA6060 interface

9.4 Support and Service

Beckhoff Support and Service provides assistance with questions regarding Beckhoff products and system solutions, as well as with their planning, commissioning, and operation.

Beckhoff subsidiaries and representative offices

Please contact your Beckhoff subsidiary or your representative office for local support and service for Beckhoff products. You can find the addresses of Beckhoff subsidiaries and representative offices at: www.beckhoff.com/worldwide.

For Beckhoff products and technologies, we offer Training programs, tutorials, and webinars.

Beckhoff Support

Beckhoff Support provides assistance with technical questions regarding the use, planning, programming, and commissioning of Beckhoff products.

☎ Hotline:	+49 5246 963-157
✉ Email:	support@beckhoff.com, Support form
Web page:	www.beckhoff.com/support

Beckhoff Service

Our service specialists are here to assist you with any questions you may have regarding after-sales service processes, such as replacement parts, repairs, etc.

☎ Hotline:	+49 5246 963-460
✉ Email:	service@beckhoff.com, Service form
Web page:	www.beckhoff.com/service

Download finder

The Download finder serves as a central source for downloadable documents and files related to Beckhoff products, such as application reports, technical documentation, drawings, and configuration files.

Beckhoff Information System

The Beckhoff Information System is the central online documentation resource for Beckhoff products and contains documentation on products and automation topics, as well as sample code.

Beckhoff Headquarters

Beckhoff Automation GmbH & Co. KG
Hülshorstweg 20
33415 Verl, Germany

☎ Phone:	+49 5246 963-0
✉ Email:	info@beckhoff.com
Web page:	www.beckhoff.com

Trademark statements

Beckhoff®, ATRO®, EtherCAT®, EtherCAT G®, EtherCAT G10®, EtherCAT P®, MX-System®, Safety over EtherCAT®, TC/BSD®, TwinCAT®, TwinCAT/BSD®, TwinSAFE®, XFC®, XPlanar® and XTS® are registered and licensed trademarks of Beckhoff Automation GmbH.

Third-party trademark statements

The Bluetooth® word mark and logos are registered trademarks owned by Bluetooth SIG, Inc and any use of such marks by Beckhoff is under license.

CANopen and CANopen FD are registered trademarks of CAN in AUTOMATION - International Users and Manufacturers Group e.V.

More Information:
www.beckhoff.com/MBxxxx

Beckhoff Automation GmbH & Co. KG
Hülshorstweg 20
33415 Verl
Germany
Phone: +49 5246 9630
info@beckhoff.com
www.beckhoff.com