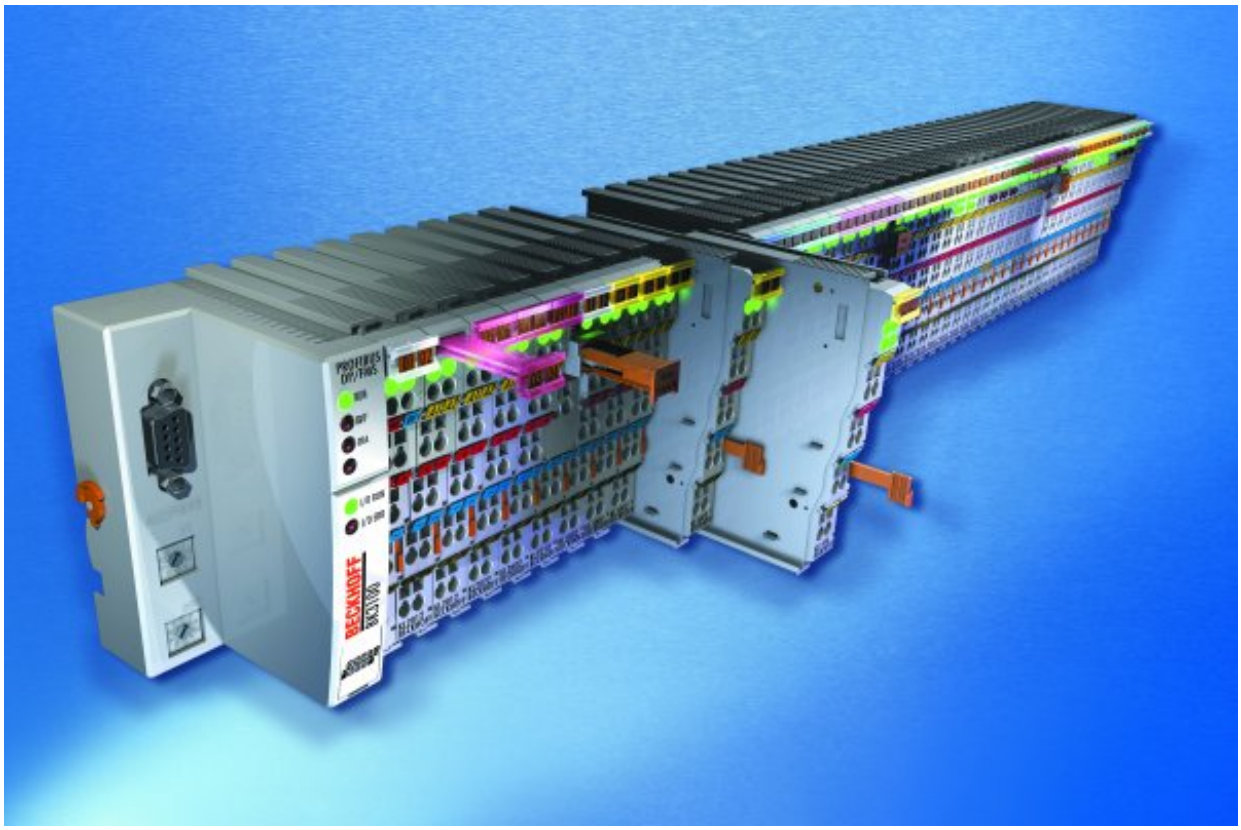

Operating instructions for

KL4011 and KL4012

Single- and Two-Channel Analog Output Terminals
Signal range: 0 to 20 mA

and

KL4021 and KL4022

Single- and Two-Channel Analog Output Terminals
Signal range: 4 to 20 mA

Version: 3.2
Date: 2013-05-22

BECKHOFF

Table of contents

1. Foreword 1
   - Notes on the documentation 1
   - Safety Instructions 2
2. Technical data 3
3. Connection 4
   - KL4011 and KL4021 4
   - KL4012 and KL4022 4
4. ATEX - Special conditions 5
5. Functional description 6
6. Terminal configuration 7
7. Register Description 8
   - General Description of Registers 8
   - Terminal-specific register description 11
   - Control and Status byte 13
   - Register communication 13
8. Appendix 15
   - Mapping 15
   - Register Table 17
   - Support and Service 18

Foreword

Notes on the documentation

This description is only intended for the use of trained specialists in control and automation engineering who are familiar with the applicable national standards. It is essential that the following notes and explanations are followed when installing and commissioning these components.
The responsible staff must ensure that the application or use of the products described satisfy all the requirements for safety, including all the relevant laws, regulations, guidelines and standards.

Disclaimer

The documentation has been prepared with care. The products described are, however, constantly under development. For that reason the documentation is not in every case checked for consistency with performance data, standards or other characteristics. In the event that it contains technical or editorial errors, we retain the right to make alterations at any time and without warning. No claims for the modification of products that have already been supplied may be made on the basis of the data, diagrams and descriptions in this documentation.

Delivery conditions

In addition, the general delivery conditions of the company Beckhoff Automation GmbH apply.

Trademarks

Beckhoff®, TwinCAT®, EtherCAT®, Safety over EtherCAT®, TwinSAFE®, XFC® and XTS® are registered trademarks of and licensed by Beckhoff Automation GmbH. Other designations used in this publication may be trademarks whose use by third parties for their own purposes could violate the rights of the owners.

Patent Pending

The TwinCAT Technology is covered, including but not limited to the following patent applications and patents: EP0851348, US6167425 with corresponding applications or registrations in various other countries.

Copyright

© Beckhoff Automation GmbH.
The reproduction, distribution and utilization of this document as well as the communication of its contents to others without express authorization are prohibited. Offenders will be held liable for the payment of damages. All rights reserved in the event of the grant of a patent, utility model or design.

Safety Instructions

State at Delivery

All the components are supplied in particular hardware and software configurations appropriate for the application. Modifications to hardware or software configurations other than those described in the documentation are not permitted, and nullify the liability of Beckhoff Automation GmbH.

Description of safety symbols

The following safety symbols are used in this documentation. They are intended to alert the reader to the associated safety instructions..

DANGER	**Serious risk of injury!** **Failure** to follow the safety instructions associated with this symbol directly endangers the life and health of persons.

CAUTION	**Danger for persons!** **Failure** to follow the safety instructions associated with this symbol may endanger persons.

Note	**Tip or pointer** This symbol indicates information that contributes to better understanding.

Technical data

Technical data	KL4011	KL4021	KL4012	KL4022
Number of outputs	1	1	2	2
Power supply	24 V_{DC} via the power contacts (alternatively 15 V_{DC} with power supply unit terminal KL9515)			
Signal voltage	0 ... 20 mA	4 ... 20 mA	0 ... 20 mA	4 ... 20 mA
Load	< 500 Ω (short-circuit-proof)			
Accuracy	± 0.5 LSB linearity error, ± 0.5 LSB offset error ±0.1% of the full scale value			
Output error	< ±0.1 % (relative to end value)		< ± 0.1 % (at 0°C ... +55°C) < ± 0.75% (at utilization of the extended temperature range)	
Resolution	12 bits			
Electrical isolation	500 V (K-Bus/signal voltage)			
Conversion time	~ 1.5 ms			
Current consumption from K-Bus	typically 60 mA			
Bits width in process image	Output: 1 x 16 bits of data (1 x 8 bit control/status optional)		Input: 2 x 16 bits of data (2 x 8 bit control/status optional)	
Configuration	no address or configuration settings			
Weight	approx. 80 g			
Operating temperature	0°C ... +55°C		-25°C ... +60°C in operation (extended temperature range) 0°C ... +55°C (according to cULus for Canada and USA) 0°C ... +55°C (according to ATEX, see special conditions)	
Storage temperature	-25°C ... +85°C		-40°C... +85°C	
Relative humidity	95 % no condensation			
Vibration / shock resistance	according to EN 60068-2-6 / EN 60068-2-27			
EMC resistance burst / ESD	according to EN 61000-6-2 (EN 50082) / EN 61000-6-4 (EN 50081)			
Installation position	variable			
Protection class	IP20			
Approvals	CE, cULus, ATEX, GL			

Connection

KL4011 and KL4021

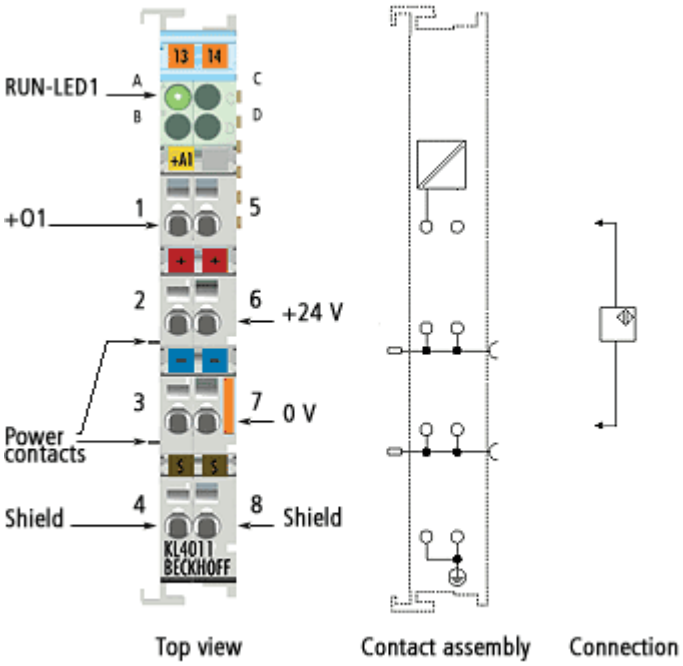

KL4012 and KL4022

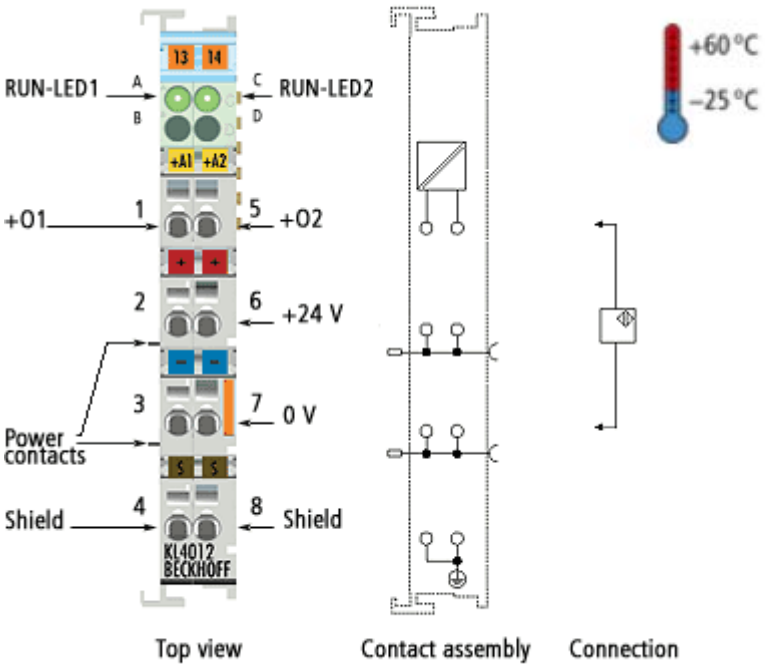

ATEX - Special conditions

WARNING	**Observe the special conditions for the intended use of Beckhoff fieldbus components in potentially explosive areas (directive 94/9/EU)!** • The certified components are to be installed in a suitable housing that guarantees a protection class of at least IP54 in accordance with EN 60529! The environmental conditions during use are thereby to be taken into account! • If the temperatures during rated operation are higher than 70°C at the feed-in points of cables, lines or pipes, or higher than 80°C at the wire branching points, then cables must be selected whose temperature data correspond to the actual measured temperature values! • Observe the permissible ambient temperature range of 0 - 55°C for the use of Beckhoff fieldbus components in potentially explosive areas! • Measures must be taken to protect against the rated operating voltage being exceeded by more than 40% due to short-term interference voltages! • The individual terminals may only be unplugged or removed from the Bus Terminal system if the supply voltage has been switched off or if a non-explosive atmosphere is ensured! • The connections of the certified components may only be connected or disconnected if the supply voltage has been switched off or if a non-explosive atmosphere is ensured! • The fuses of the KL92xx power feed terminals may only be exchanged if the supply voltage has been switched off or if a non-explosive atmosphere is ensured! • Address selectors and ID switches may only be adjusted if the supply voltage has been switched off or if a non-explosive atmosphere is ensured!

Note	**Operation of the Bus Terminal System in potentially explosive areas (ATEX)!** Pay also attention to the continuative documentation *Notes about operation of the Bus Terminal System in potentially explosive areas (ATEX)* that is available in the download area of the Beckhoff homepage http://www.beckhoff.com!

Functional description

The analog output terminals
- KL4011 and KL4012 generate signals in the range between 0 and 20 mA.

- KL4021 and KL4022 generate signals in the range between 4 and 20 mA.

with a resolution of 12 bits (4095 increments). The output current is electrically isolated from the K-Bus.

The supply voltage fed in via the power contacts is used for generating the output current.

Process data input format

In the delivery state, the process data are entered in two's complement form (integer -1 corresponds to 0xFFFF). Other formats may be selected via the feature register.

Process data		Output current	
hexadecimal	decimal	KL4011, KL4012	KL4021, KL4022
0x0000	(0)	0 mA	4 mA
0x3FFF	(16383)	10 mA	12 mA
0x7FFF	(32767)	20 mA	20 mA

LED display

Both RUN LEDs indicate the operating state of the associated terminal channels.

Green LED: RUN
- On: normal operation
- Off: Watchdog-timer overflow has occurred. If no process data are transmitted by the Bus Coupler for 100 ms, the green LEDs go out. A user-specified voltage will be applied to the output (see feature register).

Process data

The process data arriving from the Bus Coupler are output to the process:

X = PLC process data
B_h, A_h = Manufacturer scaling (R19, R20)
B_w, A_w = User scaling (R33, R34)
Y_dac = output value to the D/A converter

Neither user nor manufacturer scaling are active:
Y_dac = X (1.0)

Manufacturer scaling active:
Y_1 = B_h + A_h * X (1.1)
Y_dac = Y_1

User scaling active:
Y_2 = B_w + A_w * X (1.2)
Y_dac = Y_2

Manufacturer and user scaling active:
Y_1 = B_h + A_h * X (1.3)
Y_dac = B_w + A_w * Y_1 (1.4)

The equations of the straight line are activated via register R32.

Terminal configuration

The terminal can be configured and parameterised via the internal register structure. Each terminal channel is mapped in the Bus Coupler. Depending on the type of the Bus Coupler and the mapping configuration (e.g. Motorola/Intel format, word alignment etc.) the terminal data are mapped in different ways to the Bus Coupler memory. For parameterising a terminal, the control and status byte also has to be mapped.

BK2000 Lightbus Coupler

In the BK2000 Lightbus coupler, the control and status byte is mapped in addition to the data bytes. This is always located in the low byte at the offset address of the terminal channel.

Example for KL4012 and KL4022:

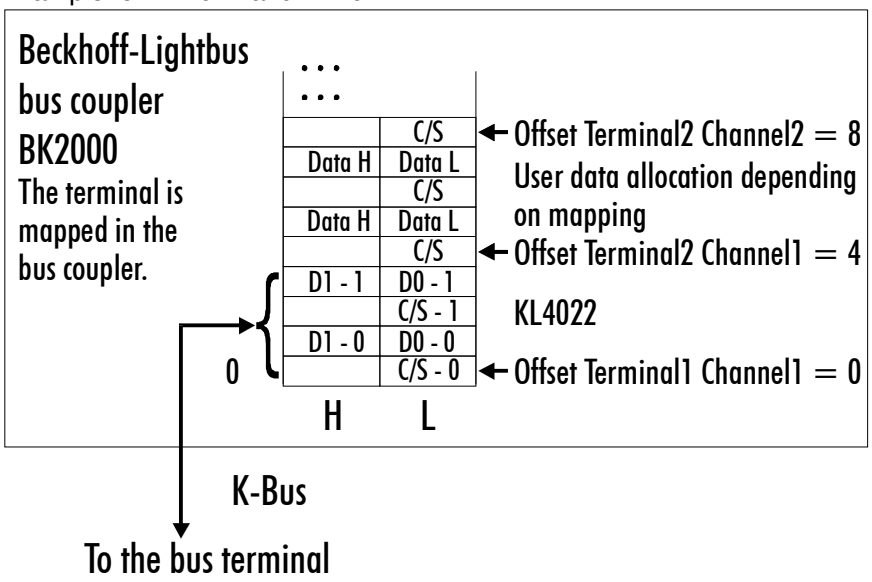

BK3000 Profibus coupler

For the BK3000 Profibus coupler, the master configuration should specify for which terminal channels the control and status byte is to be inserted. If the control and status byte are not evaluated, the terminals occupy 2 bytes per channel:

- KL4011 and KL4021: 2 bytes of output data
- KL4012 and KL4022: 4 bytes of output data

Example for KL4012 and KL4022:

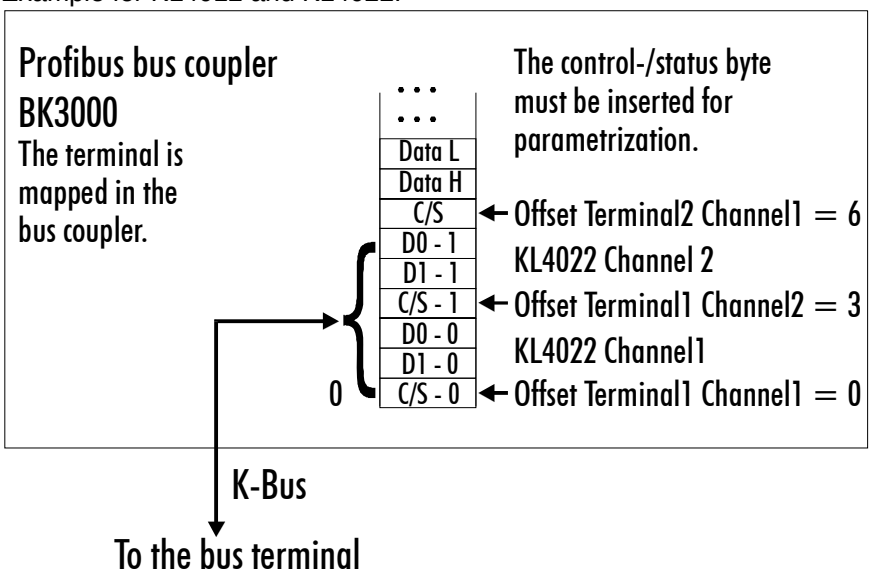

BK4000 Interbus Coupler

The BK4000 Interbus Coupler maps the terminals in the delivery state with 2 bytes per channel:

- KL4011 and KL4021: 2 bytes of output data
- KL4012 and KL4022: 4 bytes of output data

Parameterisation via the fieldbus is not possible. If the control and status byte is to be used, the KS2000 configuration software is required.

Example for KL4012 and KL4022:

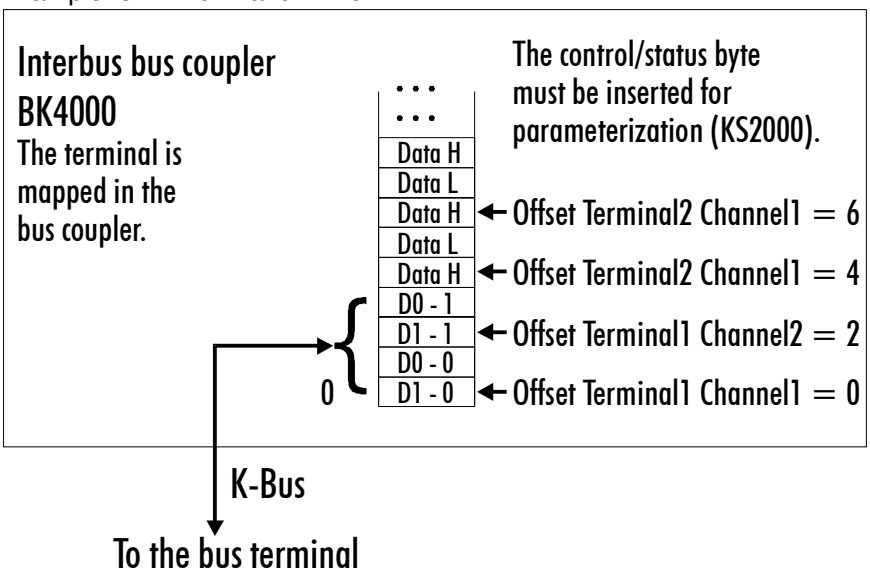

Other Bus Couplers and further information

Further information about the mapping configuration of Bus Couplers can be found in the Appendix of the respective Bus Coupler manual under *Master configuration*.

Note

The Appendix contains an overview of possible mapping configurations depending on the parameters that can be set.

Parameterisation with KS2000

The parameterisations can be carried out independently of the fieldbus system with the KS2000 configuration software via the serial configuration interface in the Bus Coupler.

Register Description

Different operating modes or functionalities may be set for the complex terminals. The *General Description of Registers* explains those register contents that are the same for all complex terminals.

The terminal-specific registers are explained in the following section.

Access to the internal terminal registers is described in the *Register Communication* section.

General Description of Registers

Complex terminals that possess a processor are able to exchange data bi-directionally with the higher-level controller. These terminals are referred to below as intelligent Bus Terminals. These include analog inputs, analog outputs, serial interface terminals (RS485, RS232, TTY etc.), counter terminals, encoder interface, SSI interface, PWM terminal and all other parameterisable terminals.

The main features of the internal data structure are the same for all the intelligent terminals. This data area is organised as words and comprises 64 registers. The important data and parameters of the terminal can be read and set through this structure. It is also possible for functions to be called by means of corresponding parameters. Each logical channel in an intelligent terminal has such a structure (4-channel analog terminals therefore have 4 sets of registers).

This structure is divided into the following areas:
(A detailed list of all registers can be found in the Appendix.)

Register	Application
0 to 7	Process variables
8 to 15	Type register
16 to 30	Manufacturer parameters
31 to 47	User parameters
48 to 63	Extended user area

Process variables

R0 to R7 Registers in the terminal's internal RAM:

The process variables can be used in addition to the actual process image. Their function is specific to the terminal.

R0 to R5: Terminal-specific registers
The function of these registers depends on the respective terminal type (see terminal-specific register description).

R6: Diagnostic register
The diagnostic register can contain additional diagnostic information. Parity errors, for instance, that occur in serial interface terminals during data transmission are indicated here.

R7: Command register
High-Byte_Write = function parameter
Low-Byte_Write = function number
High-Byte_Read = function result
Low-Byte_Read = function number

Type register

R8 to R15: Registers in the internal ROM of the terminal

The type and system parameters are hard programmed by the manufacturer, and the user can read them but cannot change them.

R8: Terminal type
The terminal type in register R8 is needed to identify the terminal.

R9: Software version (X.y)
The software version can be read as a string of ASCII characters.

R10: Data length
R10 contains the number of multiplexed shift registers and their length in bits.
The Bus Coupler sees this structure.

R11: Signal channels
Related to R10, this contains the number of channels that are logically present. Thus for example a shift register that is physically present can perfectly well consist of several signal channels.

R12: Minimum data length
The particular byte contains the minimum data length for a channel that is to be transferred. If the MSB is set, the control and status byte is not necessarily required for the terminal function and is not transferred to the control, if the Bus Coupler is configured accordingly.

R13: Data type register

Data type register	
0x00	Terminal with no valid data type
0x01	Byte array
0x02	Structure 1 byte n bytes
0x03	Word array
0x04	Structure 1 byte n words
0x05	Double word array
0x06	Structure 1 byte n double words
0x07	Structure 1 byte 1 double word
0x08	Structure 1 byte 1 double word
0x11	Byte array with variable logical channel length
0x12	Structure 1 byte n bytes with variable logical channel length (e.g. 60xx)
0x13	Word array with variable logical channel length
0x14	Structure 1 byte n words with variable logical channel length
0x15	Double word array with variable logical channel length
0x16	Structure 1 byte n double words with variable logical channel length

R14: reserved

R15: Alignment bits (RAM)
The alignment bits are used to place the analog terminal in the Bus Coupler on a byte boundary.

Manufacturer parameters

R16 to R30: Manufacturer parameter area (SEEROM)

The manufacturer parameters are specific for each type of terminal. They are programmed by the manufacturer, but can also be modified by the controller. The manufacturer parameters are stored in a serial EEPROM in the terminal, and are retained in the event of voltage drop-out.
These registers can only be altered after a code-word has been set in R31.

User parameters

R31 to R47: User parameter area (SEEROM)

The user parameters are specific for each type of terminal. They can be modified by the programmer. The user parameters are stored in a serial EEPROM in the terminal, and are retained in the event of voltage drop-out. The user area is write-protected by a code-word.

Note

R31: Code-word register in RAM
The code-word **0x1235** must be entered here so that parameters in the user area can be modified. If any other value is entered into this register, the write-protection is active. When write protection is not active, the code word is returned when the register is read. If the write protection is active, the register contains a zero value.

R32: Feature register
This register specifies the terminal's operating modes. Thus, for instance, a user-specific scaling can be activated for the analog I/Os.
R33 to R47 Terminal-specific Registers
The function of these registers depends on the respective terminal type (see terminal-specific register description).

Extended application region

R47 to R63

Extended registers with additional functions.

Terminal-specific register description

Process variables

R0 to R4: reserved

R5: Raw DAC value (Y_dac)
The 12-bit value transferred to the D/A converter is called raw DAC value. It is calculated from the process data via the manufacturer and user scaling.

R6 to R7: reserved

Manufacturer parameters

R17: Hardware compensation - offset
This register is used for hardware offset compensation (8-bit digital potentiometer) of the terminal. The register is transferred to the hardware after each processor reset or with each write access to R17. Note that the transferred offset does not correspond to the DAC values.
High byte: reserved
Low byte: Offset value (0 to 255)

R18: Hardware compensation - gain
This register is used for hardware gain compensation (8-bit digital potentiometer) of the terminal. The register is transferred to the hardware after each processor reset or with each write access to R17.
High byte: reserved
Low byte: Gain value (0 to 255)

R19: Manufacturer scaling - offset (B_h)
16 bit signed integer [0x0000]
This register contains the offset of the manufacturer's equation of the straight line (1.1). The straight-line equation is activated via register R32.

R20: Manufacturer scaling - gain (A_h)
16 bits signed integer $*2^{-8}$ [0x0020]
This register contains the scale factor of the manufacturer's equation of the straight line (1.1). The straight-line equation is activated via register R32.
1 corresponds to register value 0x0100.

R21: Manufacturer's switch-on value
[0V], 12 bits unsigned integer in X [0x000]
The manufacturer switch-on value is applied to the terminal output after a system reset or a watchdog timer overflow (terminal has not received any process data for 100 ms).

The manufacturer switch-on value is activated via register R32.

User parameters

R32: Feature register:
[0x0006]
The feature register specifies the operating modes of the terminal.

Feature bit no.		Description of the operating mode
Bit 0	1	User scaling (1.2) active [0]
Bit 1	1	Manufacturer scaling (1.1) active [1]
Bit 2	1	Watchdog timer active [1] In the delivery state, the watchdog timer is switched on. In the event of a watchdog overflow, either the manufacturer or the user switch-on value is applied to the terminal output.
Bit 3	1	Sign / amount representation [0]
Bit 7...4	-	reserved, do not change
Bit 8	0/1	0: Manufacturer switch-on value [0] 1: User switch-on value
Bit 15...9	-	reserved, do not change

R33: User scaling - offset (B_w)
16 bit signed integer [0x0000]
This register contains the offset of the user straight-line equation (4.1). The straight-line equation is activated via register R32.

R34: User scaling - gain (A_w)
16 bits signed integer * 2^{-8} [0x0100]
This register contains the scale factor of the user straight-line equation (4.1). The straight-line equation is activated via register R32.

R35: User's switch-on value (Y_2)
16 bit signed integer [0x0000]
If the user switch-on value is activated in register R32, this value is applied to the terminal output after a system reset or a watchdog timer overflow (terminal has not received any process data for 100 ms).

Control and Status byte

Control byte for process data exchange
Gain and offset compensation

The control byte is transmitted from the controller to the terminal. It can be used
- in register mode (REG = 1_{bin}) or
- during process data exchange (REG = 0_{bin}).

The control byte can be used to carry out gain and offset compensation for the terminal (process data exchange). This requires the code word to be entered in R31. The gain and offset of the terminal can then be compensated.
The parameter will only be saved permanently once the code word is reset!

Control byte:
Bit 7 = 0_{bin}
Bit 6 = 1_{bin}: Terminal compensation function is activated
Bit 4 = 1_{bin}: Gain compensation
Bit 3 = 1_{bin}: Offset compensation
Bit 2 = 0_{bin}: Slower cycle = 1000 ms,
1_{bin}: Fast cycle = 50 ms
Bit 1 = 1_{bin}: up
Bit 0 = 1_{bin}: down

Status byte for process data exchange

The status byte is transmitted from the terminal to the controller. For model KL4002, the status byte in the process data exchange is not used.

Register communication

Register access via process data exchange
Bit 7 = 1_{bin}: Register mode

If bit 7 of the control byte is set, then the first two bytes of the user data are not used for exchanging process data, but are written into or read from the terminal's register set.

Bit 6 = 0_{bin}: read
Bit 6 = 1_{bin}: write

Bit 6 of the control byte specifies whether a register should be read or written. If bit 6 is not set, then a register is read out without modifying it. The value can then be taken from the input process image.

If bit 6 is set, then the user data is written into a register. As soon as the status byte has supplied an acknowledgement in the input process image, the procedure is completed (see example).

Bit 0 to 5: Address

The address of the register that is to be addressed is entered into bits 0 to 5 of the control byte.

Control byte in register mode

MSB

REG=1	**W/R**	**A5**	**A4**	**A3**	**A2**	**A1**	**A0**

REG = 0_{bin}: Process data exchange
REG = 1_{bin}: Access to register structure
W/R = 0_{bin}: Read register
W/R = 1_{bin}: Write register
A5 to A0 = Register address
Address bits A5 to A0 can be used to address a total of 64 registers.

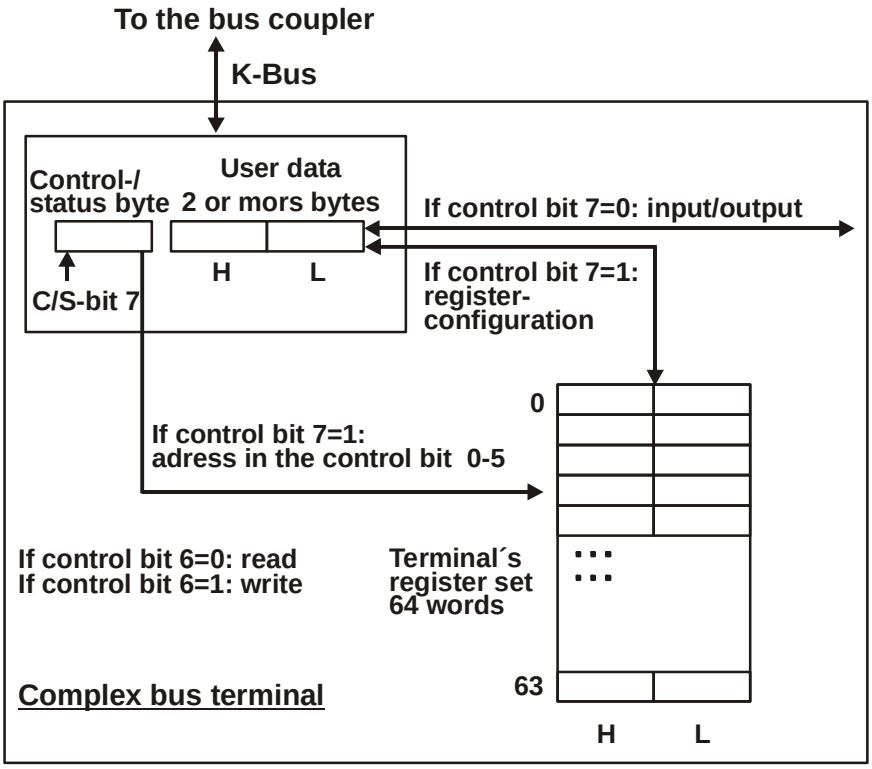

The control or status byte occupies the lowest address of a logical channel. The corresponding register values are located in the following 2 data bytes. (The BK2000 is an exception: here, an unused data byte is inserted after the control or status byte, and the register value is therefore placed on a word boundary).

Example 1

Reading of register 8 in the BK2000 with a KL4012 and the end terminal:
If the following bytes are transferred from the control to the terminal,

Byte	Byte 3	Byte 2	Byte 1	Byte 0
Name	DataOUT 1	DataOUT 0	Not used	Control byte
Value	0xXX	0xXX	0xXX	0x88

the terminal returns the following type identifier (0x0FAC corresponds to unsigned integer 4012).

Byte	Byte 3	Byte 2	Byte 1	Byte 0
Name	DataIN 1	DataIN 0	Not used	Status byte
Value	0x0F	0xAC	0x00	0x88

Example 2

Writing of register 31 in the BK2000 with an intelligent terminal and the end terminal:

If the following bytes (code word) are transferred from the control to the terminal,

Byte	Byte 3	Byte 2	Byte 1	Byte 0
Name	DataOUT 1	DataOUT 0	Not used	Control byte
Value	0x12	0x35	0xXX	0xDF

the code word is set, and the terminal returns the register address with bit 7 for register access as acknowledgement.

Byte	Byte 3	Byte 2	Byte 1	Byte 0
Name	DataIN 1	DataIN 0	Not used	Status byte
Value	0x00	0x00	0x00	0x9F

Appendix

Mapping

As already described in the *Terminal Configuration* section, each Bus Terminal is mapped in the Bus Coupler. In the delivery state, this mapping occurs with the default settings of the Bus Coupler for this terminal. The default setting can be changed with the KS2000 configuration software or with a master configuration software (e.g. TwinCAT System Manager or ComProfibus).

If the terminals are fully evaluated, they occupy memory space in the input and output process image.

The following tables provide information about the terminal mapping, depending on the conditions set in the Bus Coupler.

KL4011 and KL4021

Default mapping for: CANopen, CANCAL, DeviceNet, ControlNet, Modbus, RS232, RS485

Conditions		Word offset	High byte	Low byte
Complete evaluation:	no	0	Ch0 D1	Ch0 D0
Motorola format:	no	1	-	-
Word alignment:	any	2	-	-
		3	-	-

Default mapping for: Profibus, Interbus

Conditions		Word offset	High byte	Low byte
Complete evaluation:	no	0	Ch0 D0	Ch0 D1
Motorola format:	yes	1	-	-
Word alignment:	any	2	-	-
		3	-	-

Conditions		Word offset	High byte	Low byte
Complete evaluation:	yes	0	Ch0 D0	Ch0 CB/SB
Motorola format:	no	1	-	Ch0 D1
Word alignment:	no	2	-	-
		3	-	-

Conditions		Word offset	High byte	Low byte
Complete evaluation:	yes	0	Ch0 D1	Ch0 CB/SB
Motorola format:	yes	1	-	Ch0 D0
Word alignment:	no	2	-	-
		3	-	-

Default mapping for: Lightbus, Ethernet, Bus Terminal Controller (BCxxxx)

Conditions		Word offset	High byte	Low byte
Complete evaluation:	yes	0	res.	Ch0 CB/SB
Motorola format:	no	1	Ch0 D1	Ch0 D0
Word alignment:	yes	2	-	-
		3	-	-

Conditions		Word offset	High byte	Low byte
Complete evaluation:	yes	0	res.	Ch0 CB/SB
Motorola format:	yes	1	Ch0 D0	Ch0 D1
Word alignment:	yes	2	-	-
		3	-	-

Legend

See mapping for KL4012 and 4022.

KL4012 and 4022

Default mapping for:
CANopen, CANCAL, DeviceNet, ControlNet, Modbus, RS232, RS485

Conditions		Word offset	High byte	Low byte
Complete evaluation:	no	0	Ch0 D1	Ch0 D0
Motorola format:	no	1	Ch1 D1	Ch1 D0
Word alignment:	any	2	-	-
		3	-	-

Default mapping for:
Profibus, Interbus

Conditions		Word offset	High byte	Low byte
Complete evaluation:	no	0	Ch0 D0	Ch0 D1
Motorola format:	yes	1	Ch1 D0	Ch1 D1
Word alignment:	any	2	-	-
		3	-	-

Conditions		Word offset	High byte	Low byte
Complete evaluation:	yes	0	Ch0 D0	Ch0 CB/SB
Motorola format:	no	1	Ch1 CB/SB	Ch0 D1
Word alignment:	no	2	Ch1 D1	Ch1 D0
		3	-	-

Conditions		Word offset	High byte	Low byte
Complete evaluation:	yes	0	Ch0 D1	Ch0 CB/SB
Motorola format:	yes	1	Ch1 CB/SB	Ch0 D0
Word alignment:	no	2	Ch1 D0	Ch1 D1
		3	-	-

Default mapping for:
Lightbus, Ethernet, Bus Terminal Controller (BCxxxx)

Conditions		Word offset	High byte	Low byte
Complete evaluation:	yes	0	res.	Ch0 CB/SB
Motorola format:	no	1	Ch0 D1	Ch0 D0
Word alignment:	yes	2	res.	Ch1 CB/SB
		3	Ch1 D1	Ch1 D0

Conditions		Word offset	High byte	Low byte
Complete evaluation:	yes	0	res.	Ch0 CB/SB
Motorola format:	yes	1	Ch0 D0	Ch0 D1
Word alignment:	yes	2	res.	Ch1 CB/SB
		3	Ch1 D0	Ch1 D1

Legend

Complete evaluation:
The terminal is mapped with control and status byte.

Motorola format:
Motorola or Intel format can be set.

Word alignment:
The terminal is at word limit in the Bus Coupler.

Ch n SB: status byte for channel n (appears in the input process image).
Ch n CB: control byte for channel n (appears in the output process image).

Ch n D0: channel n, data byte 0 (byte with the lowest value)
Ch n D1: channel n, data byte 1 (byte with the highest value)

"-": This byte is not used or occupied by the terminal.
res.: reserved:
This byte occupies process data memory, although it is not used.

Register Table

These registers exist once for each channel.

Address	Denomination	Default value	R/W	Storage medium
R0	reserved	0x0000	R	
...	...	...	...	...
R4	reserved	0x0000	R	
R5	Raw DAC value	variable	R	RAM
R6	Diagnostic register not used	0x0000	R	
R7	Command register not used	0x0000	R	
R8	Terminal type	e.g. 4012	R	ROM
R9	Software version number	0x????	R	ROM
R10	Multiplex shift register	0x0218/0130	R	ROM
R11	Signal channels	0x0218	R	ROM
R12	Minimum data length	0x9800	R	ROM
R13	Data structure	0x0000	R	ROM
R14	reserved	0x0000	R	
R15	Alignment register	variable	R/W	RAM
R16	Hardware version number	0x????	R/W	SEEROM
R17	Hardware compensation: Offset	specific	R/W	SEEROM
R18	Hardware compensation: Gain	specific	R/W	SEEROM
R19	Manufacturer scaling: Offset	0x0000	R/W	SEEROM
R20	Manufacturer scaling: Gain	0x0020	R/W	SEEROM
R21	Manufacturer's switch-on value	0x0000	R/W	SEEROM
R22	reserved	0x0000	R/W	SEEROM
...	...	...	...	...
R30	reserved	0x0000	R/W	SEEROM
R31	Code word register	variable	R/W	RAM
R32	Feature register	0x0006	R/W	SEEROM
R33	User scaling: Offset	0x0000	R/W	SEEROM
R34	User scaling: Gain	0x0100	R/W	SEEROM
R35	User switch-on value	0x0000	R/W	SEEROM
R36	reserved	0x0000	R/W	SEEROM
...	...	...	...	...
R63	reserved	0x0000	R/W	SEEROM

Support and Service

BECKHOFF and their partners around the world offer comprehensive service and support, making available fast and competent assistance with all questions related to BECKHOFF products and system solutions.

BECKHOFF Support

Support offers you comprehensive technical assistance, helping you not only with the application of individual BECKHOFF products, but also with other, wide-ranging services:

- world-wide support
- design, programming and commissioning of complex automation systems
- and extensive training program for BECKHOFF system components

Hotline: +49(0)5246/963-157
Fax: +49(0)5246/963-199
e-mail: support@beckhoff.com

BECKHOFF Service

The BECKHOFF Service Centre supports you in all matters of after-sales service:

- on-site service
- repair service
- spare parts service
- hotline service

Hotline: +49(0)5246/963-460
Fax: +49(0)5246/963-479
e-mail: service@beckhoff.com

BECKHOFF company headquarters

Beckhoff Automation GmbH
Eiserstr. 5
D-33415 Verl
Germany

Phone: +49(0)5246/963-0
Fax: +49(0)5246/963-198
e-mail: info@beckhoff.com

The addresses of BECKHOFF's branch offices and representatives round the world can be found on the internet pages:
http://www.beckhoff.com
You will also find further documentation for BECKHOFF components there.