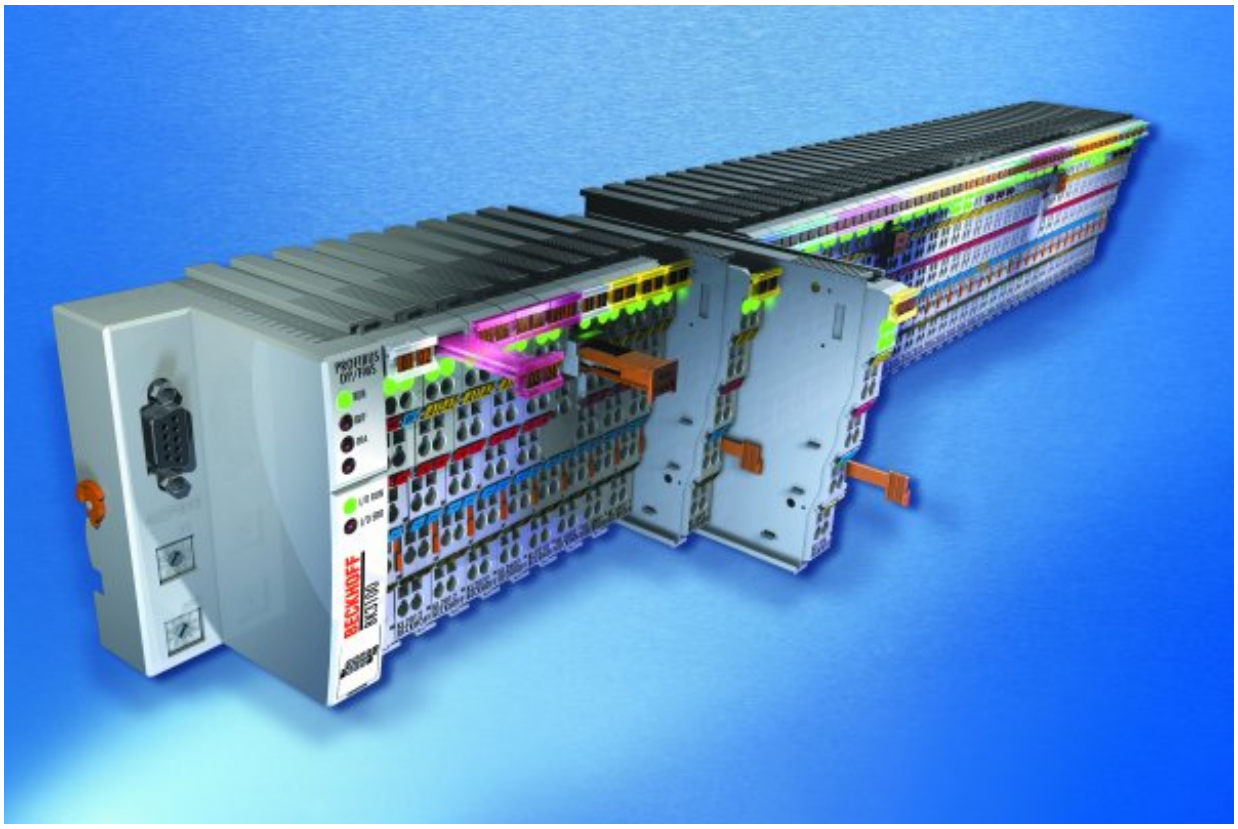

Operating instructions for

KL3011 and KL3012

Single- and Dual-Channel Analog Input Terminals
Measuring range: 0 to 20 mA

and

KL3021 and KL3022

Single- and Dual-Channel Analog Input Terminals
Measuring range: 4 to 20 mA

Version: 3.3
Date: 2013-03-27

BECKHOFF

Table of contents

1. Foreword 1
   Notes on the documentation 1
2. Technical data 2
3. Connection 3
   KL3011 and KL3021 3
   KL3012 and KL3022 3
4. ATEX - Special conditions 4
5. Functional description 5
6. Terminal configuration 7
7. Register Description 8
   General Description of Registers 8
   Terminal-specific register description 11
   Control and Status byte 14
   Register communication 15
8. Appendix 17
   Mapping 17
   Register Table 19
   Support and Service 20

Foreword

Notes on the documentation

This description is only intended for the use of trained specialists in control and automation engineering who are familiar with the applicable national standards. It is essential that the following notes and explanations are followed when installing and commissioning these components.
The responsible staff must ensure that the application or use of the products described satisfy all the requirements for safety, including all the relevant laws, regulations, guidelines and standards.

Disclaimer

The documentation has been prepared with care. The products described are, however, constantly under development. For that reason the documentation is not in every case checked for consistency with performance data, standards or other characteristics. In the event that it contains technical or editorial errors, we retain the right to make alterations at any time and without warning. No claims for the modification of products that have already been supplied may be made on the basis of the data, diagrams and descriptions in this documentation.

Delivery conditions

In addition, the general delivery conditions of the company Beckhoff Automation GmbH apply.

Trademarks

Beckhoff®, TwinCAT®, EtherCAT®, Safety over EtherCAT®, TwinSAFE®, XFC® and XTS® are registered trademarks of and licensed by Beckhoff Automation GmbH. Other designations used in this publication may be trademarks whose use by third parties for their own purposes could violate the rights of the owners.

Patent Pending

The TwinCAT Technology is covered, including but not limited to the following patent applications and patents: EP0851348, US6167425 with corresponding applications or registrations in various other countries.

Copyright

© Beckhoff Automation GmbH.
The reproduction, distribution and utilization of this document as well as the communication of its contents to others without express authorization are prohibited. Offenders will be held liable for the payment of damages. All rights reserved in the event of the grant of a patent, utility model or design.

Technical data

Technical data	KL3011	KL3021	KL3012	KL3022
Number of inputs	1	1	2	2
Power supply	via the K-Bus			
Signal current	0 ... 20 mA	4 ... 20 mA	0 ... 20 mA	4 ... 20 mA
Technology	differential input			
Internal resistance	80 Ω + 0.7 V			
Common-mode voltage U_{CM}	35 V max.			
Resolution	12 bits			
Conversion time	~ 1 ms		~ 2 ms	
Meas. error (total meas. range)	< ± 0.3% (of the full scale value)		< ± 0.30% (at 0°C ... +55°C) < ± 0.75% (at utilization of the extended temperature range)	
Surge voltage resistance	35 V_{DC}			
Electrical isolation	500 V (K-bus/signal voltage)			
Current consumption from K-Bus	typically 60 mA			
Bits width in process image	Input: 1 x 16 bits of data (1 x 8 bit control/status optional)		Input: 2 x 16 bits of data (2 x 8 bit control/status optional)	
Configuration	no address or configuration settings			
Weight	approx. 70 g			
Operating temperature	0°C ... +55°C		-25°C ... +60°C (extended temperature range) 0°C ... +55°C (according to cULus for Canada and USA) 0°C ... +55°C (according to ATEX, see special conditions)	
Storage temperature	-25°C ... +85°C		-40°C ... +85°C	
Relative humidity	95 % no condensation			
Vibration / shock resistance	according to EN 60068-2-6 / EN 60068-2-27			
EMC resistance burst / ESD	according to EN 61000-6-2 / EN 61000-6-4			
Installation position	any			
Protection class	IP20			
Approvals	CE, cULus, ATEX, GL			

Connection

KL3011 and KL3021

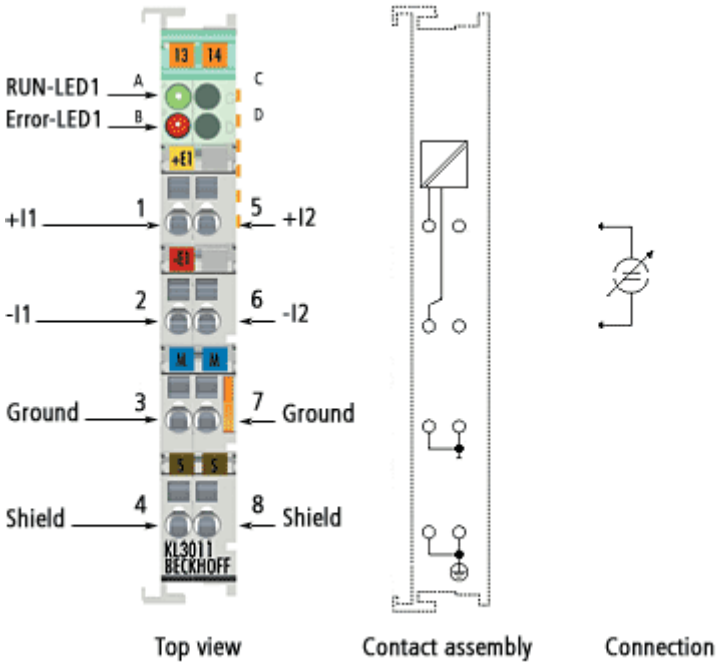

KL3012 and KL3022

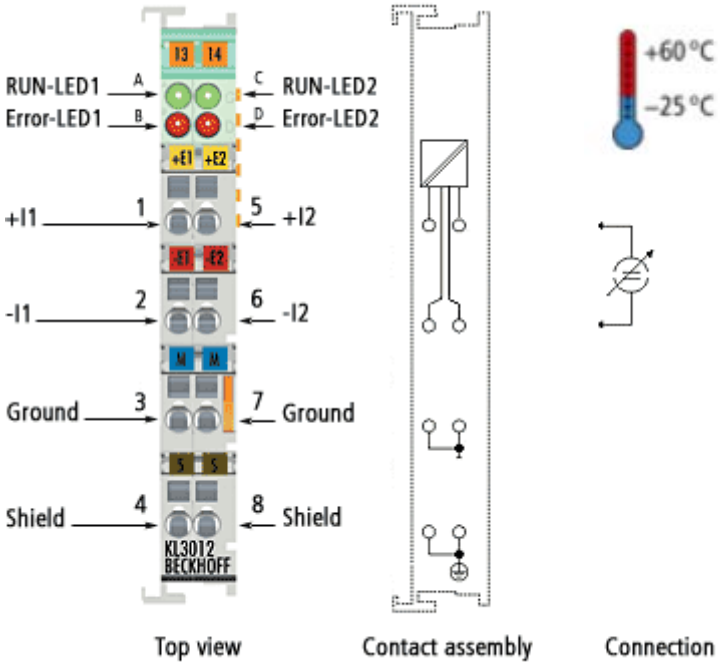

ATEX - Special conditions

WARNING	**Observe the special conditions for the intended use of Beckhoff fieldbus components in potentially explosive areas (directive 94/9/EU)!** • The certified components are to be installed in a suitable housing that guarantees a protection class of at least IP54 in accordance with EN 60529! The environmental conditions during use are thereby to be taken into account! • If the temperatures during rated operation are higher than 70°C at the feed-in points of cables, lines or pipes, or higher than 80°C at the wire branching points, then cables must be selected whose temperature data correspond to the actual measured temperature values! • Observe the permissible ambient temperature range of 0 - 55°C for the use of Beckhoff fieldbus components in potentially explosive areas! • Measures must be taken to protect against the rated operating voltage being exceeded by more than 40% due to short-term interference voltages! • The individual terminals may only be unplugged or removed from the Bus Terminal system if the supply voltage has been switched off or if a non-explosive atmosphere is ensured! • The connections of the certified components may only be connected or disconnected if the supply voltage has been switched off or if a non-explosive atmosphere is ensured! • The fuses of the KL92xx power feed terminals may only be exchanged if the supply voltage has been switched off or if a non-explosive atmosphere is ensured! • Address selectors and ID switches may only be adjusted if the supply voltage has been switched off or if a non-explosive atmosphere is ensured!

Note	**Operation of the Bus Terminal System in potentially explosive areas (ATEX)!** Pay also attention to the continuative documentation *Notes about operation of the Bus Terminal System in potentially explosive areas (ATEX)* that is available in the download area of the Beckhoff homepage http://www.beckhoff.com!

Functional description

The analog input terminals
- KL3011 and KL3012 process signals in the range between 0 and 20 mA
- KL3021 and KL3022 process signals in the range between 4 and 20 mA

with a resolution of 12 bits (4095 increments). The terminal inputs are differential inputs with common ground. Due to the differential inputs, the terminals are particularly suitable for ground-free measurements in current loops.
Cross-currents caused by voltage differences at the input terminals do not lead to any appreciable measurement distortion up to a difference in potential of 35 V (U_{CM} = 35 V).

Process data output format

In the delivery state the process data are shown in two's complement form (integer -1 corresponds to 0xFFFF). Other display types can be selected via the feature register (e.g. sign/amount representation, Siemens output format).

Measured value		Output	
KL3011, KL3012	**KL3021, KL3022**	**Decimal**	**Hexadecimal**
0 mA	**4 mA**	0	0x0000
10 mA	**12 mA**	16383	0x3FFF
20 mA	**20 mA**	32767	0x7FFF

LED display

The LEDs indicate the operating state of the associated terminal channels.
Green LED: RUN
- On: normal operation
- Off: Watchdog-timer overflow has occurred. If no process data is transmitted to the bus coupler for 100 ms, the green LEDs go out.

Red LED: ERROR
- On: The limit stop of the A/D converter has been reached. The current is greater than 21.5 mA.
- Off: normal operation

Process data

The process data that are transferred to the Bus Coupler are calculated using the following equations:

X_adc:	Output values of the A/D converter
Y_aus:	Process data to PLC
B_a, A_a:	Manufacturer gain and offset compensation (R17, R18)
B_h, A_h:	Manufacturer scaling (R19, R20)
B_w, A_w:	User scaling (R33, R34)

a) Neither user nor manufacturer scaling are active:
Y_a = (B_a + X_adc) * A_a (1.0)
Y_aus = Y_a

b) Manufacturer scaling active: (factory setting)
Y_1 = B_h + A_h * Y_a (1.1)
Y_aus = Y_1

c) User scaling active:
Y_2 =B_w + A_w * Y_a (1.2)
Y_aus = Y_2

d) Manufacturer and user scaling active:
Y_1 = B_h + A_h * Y_a (1.3)
Y_2 = B_w + A_w * Y_1 (1.4)
Y_aus = Y_2

The equations of the straight line are activated via register R32.

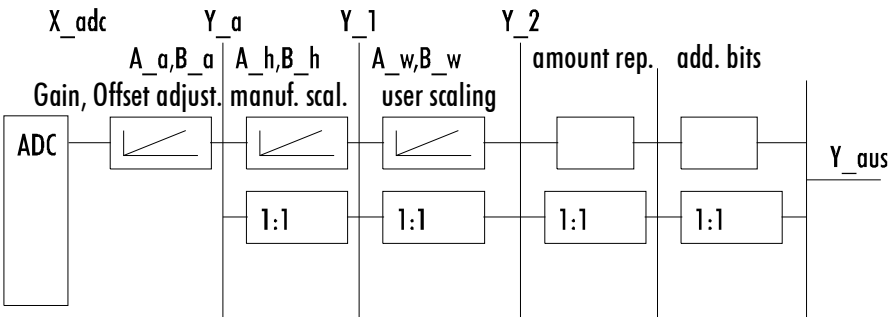

Terminal configuration

The terminal can be configured and parameterized via the internal register structure. Each terminal channel is mapped in the Bus Coupler. Depending on the type of the Bus Coupler and the mapping configuration (e.g. Motorola/Intel format, word alignment etc.) the terminal data are mapped in different ways to the Bus Coupler memory. For parameterizing a terminal, the control and status byte also has to be mapped.

BK2000 Lightbus Coupler

In the BK2000 Lightbus coupler, the control and status byte is mapped in addition to the data bytes. This is always located in the low byte at the offset address of the terminal channel.

.

Example for KL3012 and KL3022:

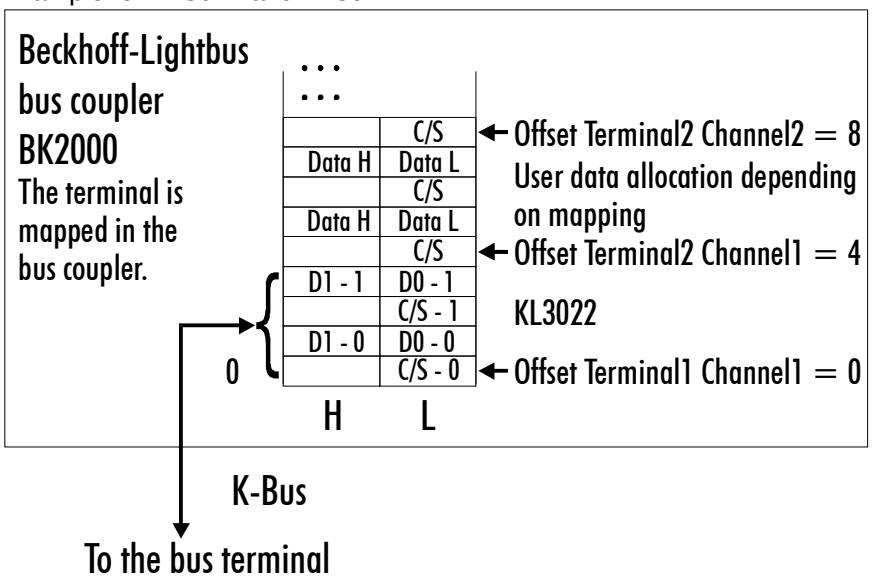

BK3000 Profibus coupler

For the BK3000 Profibus coupler, the master configuration should specify for which terminal channels the control and status byte is to be inserted. If the control and status byte are not evaluated, the terminals occupy 2 bytes per channel:

- KL3011 and KL3021: 2 bytes of input data
- KL3012 and KL3022: 4 bytes of input data

Example for KL3012 and KL3022:

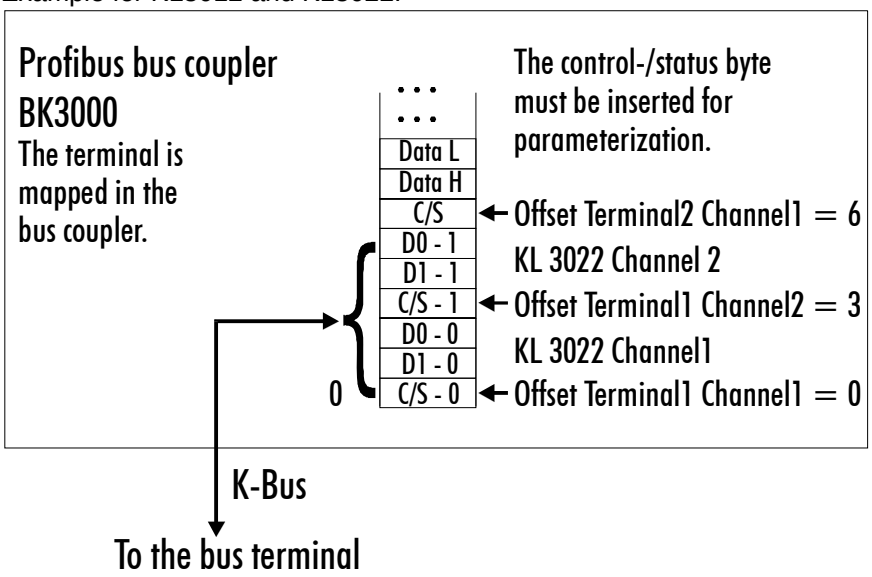

BK4000 Interbus Coupler

The BK4000 Interbus Coupler maps the terminals in the delivery state with 2 bytes per channel:

- KL3011 and KL3021: 2 bytes of input data
- KL3012 and KL3022: 4 bytes of input data

Parameterization via the fieldbus is not possible. If the control and status byte is to be used, the KS2000 configuration software is required.

Example for KL3012 and KL3022:

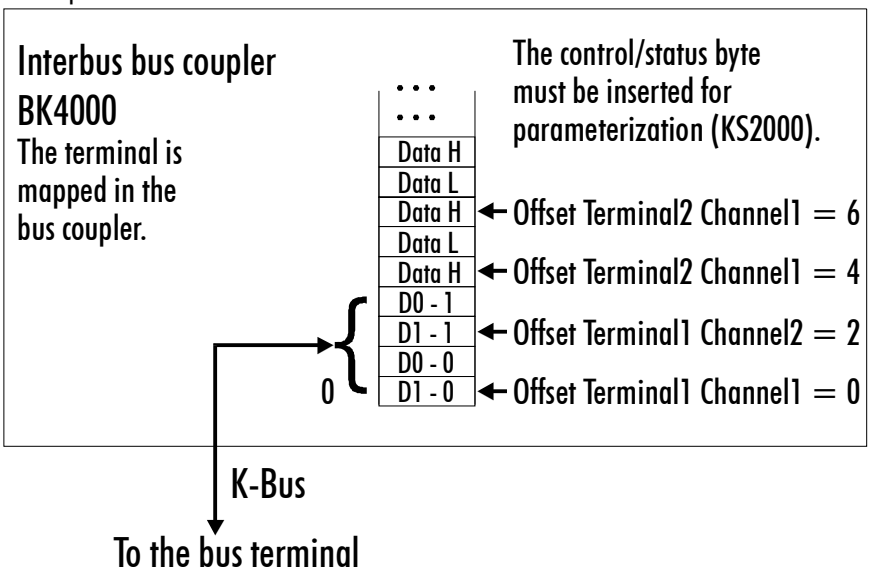

Other Bus Couplers and further information

Further information about the mapping configuration of Bus Couplers can be found in the Appendix of the respective Bus Coupler manual under *Master configuration*.

Note

The Appendix contains an overview of possible mapping configurations depending on the parameters that can be set.

Parameterization with KS2000

The parameterizations can be carried out independently of the fieldbus system with the KS2000 configuration software via the serial configuration interface in the Bus Coupler.

Register Description

Different operating modes or functionalities may be set for the complex terminals. The *General Description of Registers* explains those register contents that are the same for all complex terminals.

The terminal-specific registers are explained in the following section.

Access to the internal terminal registers is described in the *Register Communication* section.

General Description of Registers

Complex terminals that possess a processor are able to exchange data bi-directionally with the higher-level controller. These terminals are referred to below as intelligent Bus Terminals. These include analog inputs, analog outputs, serial interface terminals (RS485, RS232, TTY etc.), counter terminals, encoder interface, SSI interface, PWM terminal and all other parameterizable terminals.

The main features of the internal data structure are the same for all the

intelligent terminals. This data area is organized as words and comprises 64 registers. The important data and parameters of the terminal can be read and set through this structure. It is also possible for functions to be called by means of corresponding parameters. Each logical channel in an intelligent terminal has such a structure (4-channel analog terminals therefore have 4 sets of registers).

This structure is divided into the following areas:
(A detailed list of all registers can be found in the Appendix.)

Register	Application
0 to 7	Process variables
8 to 15	Type register
16 to 30	Manufacturer parameters
31 to 47	User parameters
48 to 63	Extended user area

Process variables

R0 to R7 Registers in the terminal's internal RAM:

The process variables can be used in addition to the actual process image. Their function is specific to the terminal.

R0 to R5: Terminal-specific registers
The function of these registers depends on the respective terminal type (see terminal-specific register description).

R6: Diagnostic register
The diagnostic register can contain additional diagnostic information. Parity errors, for instance, that occur in serial interface terminals during data transmission are indicated here.

R7: Command register
High-Byte_Write = function parameter
Low-Byte_Write = function number
High-Byte_Read = function result
Low-Byte_Read = function number

Type register

R8 to R15: Registers in the internal ROM of the terminal

The type and system parameters are hard programmed by the manufacturer, and the user can read them but cannot change them.

R8: Terminal type
The terminal type in register R8 is needed to identify the terminal.

R9: Software version (X.y)
The software version can be read as a string of ASCII characters.

R10: Data length
R10 contains the number of multiplexed shift registers and their length in bits.
The Bus Coupler sees this structure.

R11: Signal channels
Related to R10, this contains the number of channels that are logically present. Thus for example a shift register that is physically present can perfectly well consist of several signal channels.

R12: Minimum data length
The particular byte contains the minimum data length for a channel that is to be transferred. If the MSB is set, the control and status byte is not necessarily required for the terminal function and is not transferred to the control, if the Bus Coupler is configured accordingly.

R13: Data type register

Data type register	
0x00	Terminal with no valid data type
0x01	Byte array
0x02	Structure 1 byte n bytes
0x03	Word array
0x04	Structure 1 byte n words
0x05	Double word array
0x06	Structure 1 byte n double words
0x07	Structure 1 byte 1 double word
0x08	Structure 1 byte 1 double word
0x11	Byte array with variable logical channel length
0x12	Structure 1 byte n bytes with variable logical channel length (e.g. 60xx)
0x13	Word array with variable logical channel length
0x14	Structure 1 byte n words with variable logical channel length
0x15	Double word array with variable logical channel length
0x16	Structure 1 byte n double words with variable logical channel length

R14: reserved

R15: Alignment bits (RAM)
The alignment bits are used to place the analog terminal in the Bus Coupler on a byte boundary.

Manufacturer parameters

R16 to R30: Manufacturer parameter area (SEEROM)

The manufacturer parameters are specific for each type of terminal. They are programmed by the manufacturer, but can also be modified by the controller. The manufacturer parameters are stored in a serial EEPROM in the terminal, and are retained in the event of voltage drop-out.
These registers can only be altered after a code-word has been set in R31.

User parameters

R31 to R47: User parameter area (SEEROM)

The user parameters are specific for each type of terminal. They can be modified by the programmer. The user parameters are stored in a serial EEPROM in the terminal, and are retained in the event of voltage drop-out. The user area is write-protected by a code-word.

Note

R31: Code-word register in RAM
The code-word **0x1235** must be entered here so that parameters in the user area can be modified. If any other value is entered into this register, the write-protection is active. When write protection is not active, the code word is returned when the register is read. If the write protection is active, the register contains a zero value.

R32: Feature register
This register specifies the terminal's operating modes. Thus, for instance, a user-specific scaling can be activated for the analog I/Os.

R33 to R47 Terminal-specific Registers
The function of these registers depends on the respective terminal type (see terminal-specific register description).

Extended application region

R47 to R63

Extended registers with additional functions.

Terminal-specific register description

Process variables

R0: Raw ADC value (X_R)
This register contains the raw ADC value with gain and offset error.

R1 to R5: Reserved

R6: Diagnostic register
High byte: reserved
Low byte: Status byte

Manufacturer parameters

R17: Hardware compensation - offset (B_a)
16 bit signed integer
This register is used for offset compensation of the terminal (Eq. 1.1).
Register value approx. 0xFFXX

R18: Hardware compensation - gain (A_a)
16 Bit * 2^{-12}
This register is used for gain compensation of the terminal (Eq. 1.1).
1 corresponds to 0x1000.
Register value approx. 0x11XX

R19: Manufacturer scaling - offset (B_h)
16 bit signed integer [0x0000]
This register contains the offset of the manufacturer's equation of the straight line (1.3). The straight-line equation is activated via register R32.

R20: Manufacturer scaling - gain (A_h)
16 bits signed integer *2^{-10} [0x2002]
This register contains the scale factor of the manufacturer's equation of the straight line (1.3). The straight-line equation is activated via register R32.
1 corresponds to register value 0x0400.

R21: Over range limit (OVRL)
16 bits signed integer in Y_a Eq. 1.0 [0x0FFF]
This limit value limits the maximum measuring range of the input terminal. If it is exceeded, the associated status bit is set, and the maximum value is displayed.

R22: Under range limit (UNRL)
16 bits signed integer in Y_a Eq.1.0 [0x0000]
If the actual value falls below this limit, the associated status bit is set, and the minimum value is displayed.

R23: ADC hardware preset
[0x0000]
Initialization of the ADC offset register.

User parameters

R32: Feature register:
[0x1106]
The feature register specifies the operating modes of the terminal.

Feature bit no.		Description of the operating mode
Bit 0	1	User scaling (R33, R44) active [0]
Bit 1	1	Manufacturer scaling (R19, R20) active [1]
Bit 2	1	Watchdog timer active [1] In the delivery state, the watchdog timer is switched on.
Bit 3	1	Sign / amount representation [0] Sign / amount representation is active instead of two's-complement representation. (-1 = 0x8001)
Bit 4	1	Siemens output format [0] This bit is used to set the Siemens output format (see below).
Bit 7 ... 5	-	reserved, do not change
Bit 8	1	Over range Protection [1] If values exceed or fall below the limits of the registers OVRL (R21) and UNRL (R22), the status bits are set and the measuring range is restricted accordingly.
Bit 9	1	Limit value 1 active [0] The process data are compared with limit value 1 (R35), and appropriate status bits are set.
Bit 10	1	Limit value 2 active [0] The process data are compared with limit value 1 (R36), and appropriate status bits are set.
Bit 11	1	Filter 1 active [0] For filter characteristics see R37
Bit 12	1	reserved, do not change
Bit 15 ... 13	-	reserved, do not change

If the Siemens output format is selected, the lowest three bits are used for status evaluation. The process data is represented in bits 3 to 15, with bit 15 representing the sign bit. Scaling of the measurement reading according to the Siemens standard has to be done via user scaling (R33, R34).

KL3011 and KL3012

Bit Measured value	Bit 15 to 3	Bit 2 X	Bit 1 Error	Bit 0 Overflow
Measured value > 20 mA		0	0	1
Measured value < 20 mA	Process data	0	0	0

KL3021 and KL3022

Bit Measured value	Bit 15 to 3	Bit 2 X	Bit 1 Wire breakage	Bit 0 Overflow/Underflow
Measured value > 20 mA		0	0	1
4 mA <measured value <20 mA	Process data	0	0	0
Measured value < 4 mA	Process data	0	1	1

R33: User scaling - offset (B_w)
16 bit signed integer
This register contains the offset of the user straight-line equation (1.4). The straight-line equation is activated via register R32.

R34: User scaling - gain (A_w)
16 bits signed integer* 2^{-8}
This register contains the scale factor of the user straight-line equation (1.4). The straight-line equation is activated via register R32.

R35: Limit value 1 (Y_2)
If the process data are outside this limit value, the appropriate bits are set in the status byte.

R36: Limit value 2 (Y_2)
If the process data are outside this limit value, the appropriate bits are set in the status byte.

R37: Filter constant
[0x0000]

Note

This documentation applies to all terminals from firmware version 3x. The version number can be found within the serial number on the right-hand side face of the terminal: xxxx3xxx

Example: 5298**3A**2A ⇒ The firmware version is **3A**.

If the internal filter is activated via R32.11, the following filter constants can be selected in R37. In the standard setting, the corresponding conversion time is 2.5 ms:

R37	Explanation	
0x0000	2nd order FIR filter.	default value
0x0100	1st order IIR filter, cut-off frequency f_g approx.1 kHz	The implemented IIR filters do not have any notch behavior, i.e., they do not explicitly suppress any frequency.
0x0200	1st order IIR filter, cut-off frequency f_g approx. 100 Hz	
0x0300	1st order IIR filter, cut-off frequency f_g approx. 50 Hz	
0x0400	1st order IIR filter, cut-off frequency f_g approx. 20 Hz	
0x0500	1st order IIR filter, cut-off frequency f_g approx. 10 Hz	
0x0600	1st order IIR filter, cut-off frequency f_g approx. 5 Hz	
0x0700	1st order IIR filter, cut-off frequency f_g approx. 1 Hz	
0x1000	50 Hz FIR filter Averaging over 16 values and first notch 25 Hz	In contrast to the IIR filters, FIR filter have notch behavior. The timer settings of the notch filters are set via channel 0 of the terminal. This means that the 50 Hz filter on channel 0 and the 60 Hz filter on channel 1 cannot be active simultaneously.
0x2000	60 Hz FIR filter Averaging over 16 values and first notch 20 Hz	
Other values	No filter active	

Control and Status byte

Control byte for process data exchange Gain and offset compensation

The control byte is transmitted from the controller to the terminal. It can be used
- in register mode (REG = 1_{bin}) or
- during process data exchange (REG = 0_{bin}).

The control byte can be used to carry out gain and offset compensation for the terminal (process data exchange). This requires the code word to be entered in R31. The gain and offset of the terminal can then be compensated.
The parameter will only be saved permanently once the code word is reset!

Control byte:
Bit 7 = 0_{bin}
Bit 6 = 1_{bin}: Terminal compensation function is activated
Bit 4 = 1_{bin}: Gain compensation
Bit 3 = 1_{bin}: Offset compensation
Bit 2 = 0_{bin}: Slower cycle = 1000 ms,
1_{bin}: Fast cycle = 50 ms
Bit 1 = 1_{bin}: up
Bit 0 = 1_{bin}: down

Status byte for process data exchange

The status byte is transmitted from the terminal to the controller. The status byte contains various status bits for the analog input channel:

Status byte:
Bit 7 = 0_{bin}
Bit 6= 1_{bin}: ERROR - general error bit

Bit5 | Bit4
0_{bin} | 0_{bin}: Limit value 2 not activated
0_{bin} | 1_{bin}: Process data less than limit value 2
1_{bin} | 0_{bin}: Process data greater than limit value 2
1_{bin} | 1_{bin}: Process data equal limit value 2

Bit3 | Bit2
0_{bin} | 0_{bin}: Limit value 1 not activated
0_{bin} | 1_{bin}: Process data less than limit value 1
1_{bin} | 0_{bin}: Process data greater than limit value 1
1_{bin} | 1_{bin}: Process data equal limit value 1

Bit 1 = 1_{bin}: Over range
Bit 0= 1_{bin}: Under range

Register communication

Register access via process data exchange
Bit 7 = 1_{bin}: Register mode

If bit 7 of the control byte is set, then the first two bytes of the user data are not used for exchanging process data, but are written into or read from the terminal's register set.

Bit 6 = 0_{bin}: read
Bit 6 = 1_{bin}: write

Bit 6 of the control byte specifies whether a register should be read or written. If bit 6 is not set, then a register is read out without modifying it. The value can then be taken from the input process image.

If bit 6 is set, then the user data is written into a register. As soon as the status byte has supplied an acknowledgement in the input process image, the procedure is completed (see example).

Bit 0 to 5: Address

The address of the register that is to be addressed is entered into bits 0 to 5 of the control byte.

Control byte in register mode

MSB

REG=1	**W/R**	**A5**	**A4**	**A3**	**A2**	**A1**	**A0**

REG = 0_{bin}: Process data exchange
REG = 1_{bin}: Access to register structure
W/R = 0_{bin}: Read register
W/R = 1_{bin}: Write register
A5 to A0 = Register address
Address bits A5 to A0 can be used to address a total of 64 registers.

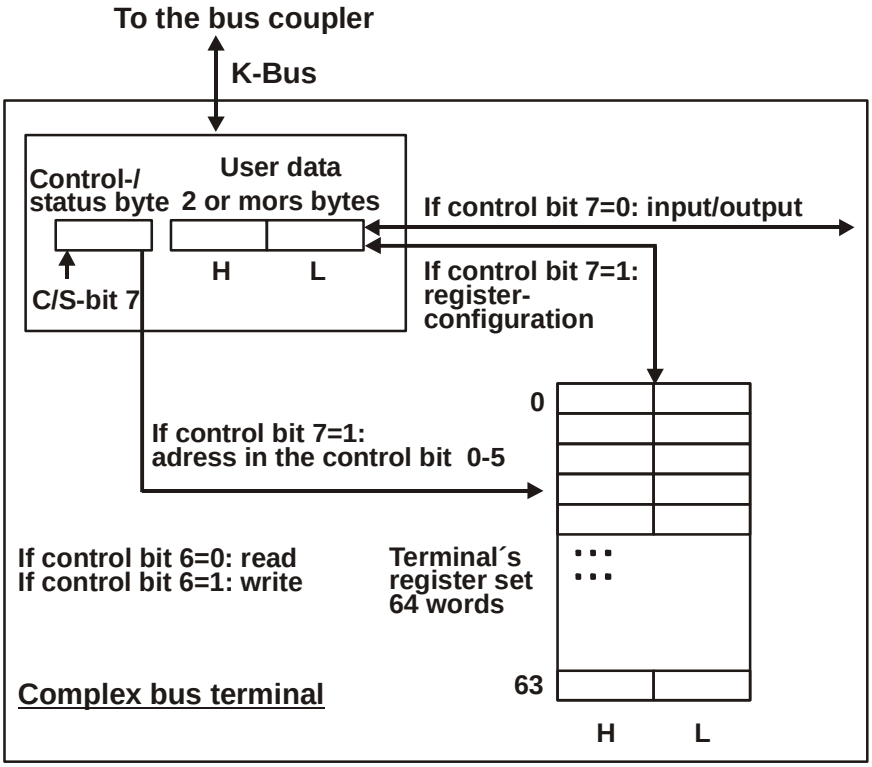

The control or status byte occupies the lowest address of a logical channel. The corresponding register values are located in the following 2 data bytes. (The BK2000 is an exception: here, an unused data byte is inserted after the control or status byte, and the register value is therefore placed on a word boundary).

Example 1

Reading of register 8 in the BK2000 with a KL3012 and the end terminal:

If the following bytes are transferred from the control to the terminal,

Byte	Byte 3	Byte 2	Byte 1	Byte 0
Name	DataOUT 1	DataOUT 0	Not used	Control byte
Value	0xXX	0xXX	0xXX	0x88

the terminal returns the following type identifier (0x0BC4 corresponds to unsigned integer 3012).

Byte	Byte 3	Byte 2	Byte 1	Byte 0
Name	DataIN 1	DataIN 0	Not used	Status byte
Value	0x0B	0xC4	0x00	0x88

Example 2

Writing of register 31 in the BK2000 with an intelligent terminal and the end terminal:

If the following bytes (code word) are transferred from the control to the terminal,

Byte	Byte 3	Byte 2	Byte 1	Byte 0
Name	DataOUT 1	DataOUT 0	Not used	Control byte
Value	0x12	0x35	0xXX	0xDF

the code word is set, and the terminal returns the register address with bit 7 for register access as acknowledgement.

Byte	Byte 3	Byte 2	Byte 1	Byte 0
Name	DataIN 1	DataIN 0	Not used	Status byte
Value	0x00	0x00	0x00	0x9F

Appendix

Mapping

As already described in the *Terminal Configuration* section, each Bus Terminal is mapped in the Bus Coupler. In the delivery state, this mapping occurs with the default settings of the Bus Coupler for this terminal. The default setting can be changed with the KS2000 configuration software or with a master configuration software (e.g. TwinCAT System Manager or ComProfibus).

If the terminals are fully evaluated, they occupy memory space in the input and output process image.

The following tables provide information about the terminal mapping, depending on the conditions set in the Bus Coupler.

KL3011 and KL3021

Default mapping for CANopen, CANCAL, DeviceNet, ControlNet, Modbus, RS232 and RS485 Coupler

Conditions		Word offset	High byte	Low byte
Complete evaluation:	no	0	Ch1 D1	Ch1 D0
Motorola format:	no	1	-	-
Word alignment:	any	2	-	-
		3	-	-

Default mapping for Profibus and Interbus Coupler

Conditions		Word offset	High byte	Low byte
Complete evaluation:	no	0	Ch1 D0	Ch1 D1
Motorola format:	yes	1	-	-
Word alignment:	any	2	-	-
		3	-	-

Conditions		Word offset	High byte	Low byte
Complete evaluation:	yes	0	Ch1 D0	Ch1 CB/SB
Motorola format:	no	1	-	Ch1 D1
Word alignment:	no	2	-	-
		3	-	-

Conditions		Word offset	High byte	Low byte
Complete evaluation:	yes	0	Ch1 D1	Ch1 CB/SB
Motorola format:	yes	1	-	Ch1 D0
Word alignment:	no	2	-	-
		3	-	-

Default mapping for Lightbus and Ethernet Coupler and Bus Terminal Controller (BCxxxx, BXxxxx)

Conditions		Word offset	High byte	Low byte
Complete evaluation:	yes	0	res.	Ch1 CB/SB
Motorola format:	no	1	Ch1 D1	Ch1 D0
Word alignment:	yes	2	-	-
		3	-	-

Conditions		Word offset	High byte	Low byte
Complete evaluation:	yes	0	res.	Ch1 CB/SB
Motorola format:	yes	1	Ch1 D0	Ch1 D1
Word alignment:	yes	2	-	-
		3	-	-

Legend

See KL3021 and KL3022 mapping.

KL3012 and KL3022

Default mapping for CANopen, CANCAL, DeviceNet, ControlNet, Modbus, RS232 and RS485 Coupler

Conditions		Word offset	High byte	Low byte
Complete evaluation:	no	0	Ch1 D1	Ch1 D0
Motorola format:	no	1	Ch2 D1	Ch2 D0
Word alignment:	any	2	-	-
		3	-	-

Default mapping for Profibus and Interbus Coupler

Conditions		Word offset	High byte	Low byte
Complete evaluation:	no	0	Ch1 D0	Ch1 D1
Motorola format:	yes	1	Ch2 D0	Ch2 D1
Word alignment:	any	2	-	-
		3	-	-

Conditions		Word offset	High byte	Low byte
Complete evaluation:	yes	0	Ch1 D0	Ch1 CB/SB
Motorola format:	no	1	Ch2 CB/SB	Ch1 D1
Word alignment:	no	2	Ch2 D1	Ch2 D0
		3	-	-

Conditions		Word offset	High byte	Low byte
Complete evaluation:	yes	0	Ch1 D1	Ch1 CB/SB
Motorola format:	yes	1	Ch2 CB/SB	Ch1 D0
Word alignment:	no	2	Ch2 D0	Ch2 D1
		3	-	-

Default mapping for Lightbus and Ethernet Coupler and Bus Terminal Controller (BCxxxx, BXxxxx)

Conditions		Word offset	High byte	Low byte
Complete evaluation:	yes	0	res.	Ch1 CB/SB
Motorola format:	no	1	Ch1 D1	Ch1 D0
Word alignment:	yes	2	res.	Ch2 CB/SB
		3	Ch2 D1	Ch2 D0

Conditions		Word offset	High byte	Low byte
Complete evaluation:	yes	0	res.	Ch1 CB/SB
Motorola format:	yes	1	Ch1 D0	Ch1 D1
Word alignment:	yes	2	res.	Ch2 CB/SB
		3	Ch2 D0	Ch2 D1

Legend

Complete evaluation:
The terminal is mapped with control and status byte.

Motorola format:
Motorola or Intel format can be set.

Word alignment:
The terminal is at word limit in the Bus Coupler.

Ch n SB: status byte for channel n (appears in the input process image).
Ch n CB: control byte for channel n (appears in the output process image).

Ch n D0: channel n, data byte 0 (byte with the lowest value)
Ch n D1: channel n, data byte 1 (byte with the highest value)

"-": This byte is not used or occupied by the terminal.
res.: reserved:
This byte occupies process data memory, although it is not used.

Register Table

These registers exist once for each channel.

Address	Denomination	Default value	R/W	Storage medium
R0	Raw ADC value	variable	R	RAM
R1	reserved	0x0000	R	
...	...	...	...	...
R5	reserved	0x0000	R	
R6	Diagnostic register	variable	R	RAM
R7	Command register not used	0x0000	R	
R8	Terminal type	e.g. 3012	R	ROM
R9	Software version number	0x????	R	ROM
R10	Multiplex shift register	0x0130	R	ROM
R11	Signal channels	0x0218	R	ROM
R12	Minimum data length	0x0098	R	ROM
R13	Data structure	0x0000	R	ROM
R14	reserved	0x0000	R	
R15	Alignment register	variable	R/W	RAM
R16	Hardware version number	0x????	R/W	SEEROM
R17	Hardware compensation: Offset	specific	R/W	SEEROM
R18	Hardware compensation: Gain	specific	R/W	SEEROM
R19	Manufacturer scaling: Offset	0x0000	R/W	SEEROM
R20	Manufacturer scaling: Gain	0x2002	R/W	SEEROM
R21	Over range limit	0x0FFF	R/W	SEEROM
R22	Under range limit	0x0000	R/W	SEEROM
R23	ADC hardware preset	0x0000	R/W	SEEROM
R24	reserved	0x0000	R/W	SEEROM
...	...	...	...	...
R30	reserved	0x0000	R/W	SEEROM
R31	Code word register	variable	R/W	RAM
R32	Feature register	0x1106	R/W	SEEROM
R33	User scaling: Offset	0x0000	R/W	SEEROM
R34	User scaling: Gain	0x0100	R/W	SEEROM
R35	Limit value 1	0x0000	R/W	SEEROM
R36	Limit value 2	0x0000	R/W	SEEROM
R37	reserved	0x0000	R/W	SEEROM
...	...	...	...	...
R63	reserved	0x0000	R/W	SEEROM

Support and Service

BECKHOFF and their partners around the world offer comprehensive service and support, making available fast and competent assistance with all questions related to BECKHOFF products and system solutions.

BECKHOFF Support

Support offers you comprehensive technical assistance, helping you not only with the application of individual BECKHOFF products, but also with other, wide-ranging services:

- world-wide support
- design, programming and commissioning of complex automation systems
- and extensive training program for BECKHOFF system components

Hotline: +49(0)5246/963-157
Fax: +49(0)5246/963-199
e-mail: support@beckhoff.com

BECKHOFF Service

The BECKHOFF Service Centre supports you in all matters of after-sales service:

- on-site service
- repair service
- spare parts service
- hotline service

Hotline: +49(0)5246/963-460
Fax: +49(0)5246/963-479
e-mail: service@beckhoff.com

BECKHOFF company headquarters

Beckhoff Automation GmbH
Eiserstr. 5
D-33415 Verl
Germany

Phone: +49(0)5246/963-0
Fax: +49(0)5246/963-198
e-mail: info@beckhoff.com

The addresses of BECKHOFF's branch offices and representatives round the world can be found on the internet pages:
http://www.beckhoff.com
You will also find further documentation for BECKHOFF components there.