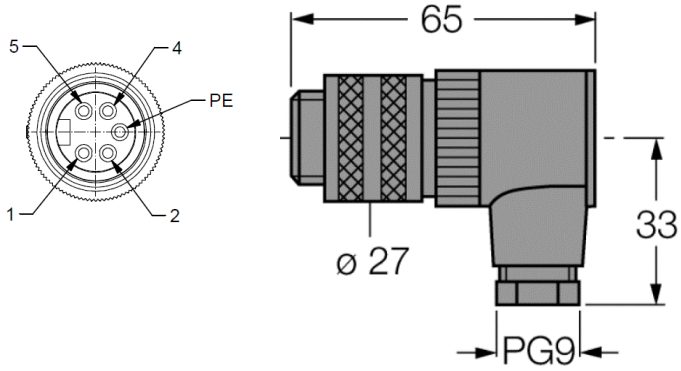

Accessories 7/8" | 7/8"- Plug, male, angled, 5-pole, max.1.5mm², screw connection

Electrical data	ZS2020-2830
Rated voltage	600 V
Rated current	9 A
Insulation resistance	≥ 10^8Ω

Mechanical data	
Protection degree	IP 67 in screwed condition
Pollution degree	3
Temperature range	-25 °C…+85 °C
Contact cycles	≥50
Type of connection	Screw connection
Wire cross section	max. 1.5 mm²
Outer mantle diameter	6-8 mm

Material	
Contact material	CuZn
Material of contact body	PA, black
Housing	PBT, black
Coupling nut/-screw	Al, anodized

Ordering information	
ZS2020-2830	7/8"-Plug, male, angled, 5-pole, max. 1.5mm²

Beckhoff® and EtherCAT are registered trademarks of Beckhoff. Information is subject to change without notice and warranted only to the extent agreed in the terms of contract. Beckhoff Automation GmbH & Co. KG, Huelshorst 20, 33415 Verl, Germany, Tel.: +49 (0) 5246 963 0, Fax.: +49 (0) 5246 963 149, http://www.beckhoff.com