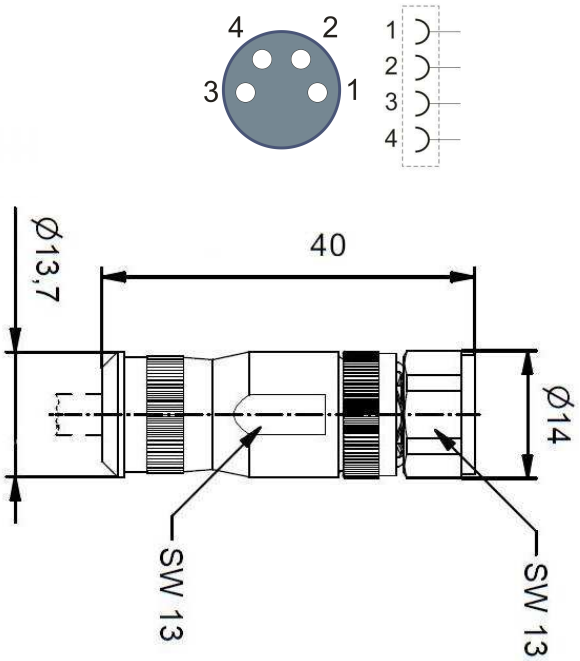

M8 coupler | **4-pole, IP67, field assembly, cable outlet 5,0-6,5mm**

Electrical data	
Rated voltage	30 V
Rated current (40 °C)	4 A
Insulation resistance	≥100MΩ
EMC-Capability	shielded

Mechanical data	
Termination	screw
Wire gauge (mm)	0,14 – 0,50 mm²
Wire gauge (AWG)	26 - 20
Cable outlet	5,0 – 6,5 mm
Temperature range	-30 °C…+85 °C
Protection level	IP67
Pollution degree	3/2
Contact cycles	≥ 100

Material	
Contact material	CuZn (brass)
Contact surface	Au (gold)
Material of contact body	PA6, UL 94 V-0
Cable sealing	NBR
O-Ring	Silicone / NBR
Material of housing	CuZn (brass nickel plated)

Ordering information	Description
ZS1090-1007	4-pole, IP67, field assembly

Beckhoff® and EtherCAT are registered trademarks of Beckhoff. Information is subject to change without notice and warranted only to the extent agreed in the terms of contract. Beckhoff Automation GmbH, Eiserstr. 5, 33415 Verl, Germany, Tel.: +49 (0) 5246 963 0, Fax.: +49 (0) 5246 963 149, http://www.beckhoff.com