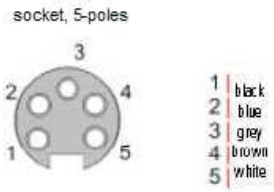

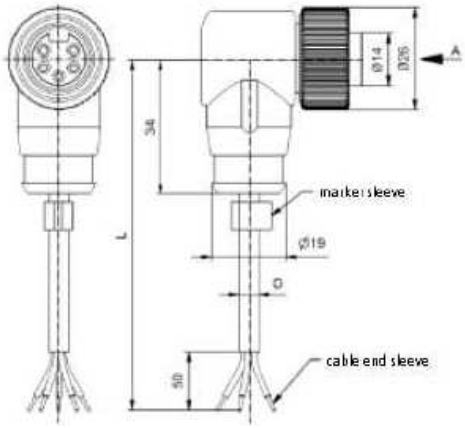

Power cable 7/8" **| 7/8"-socket, angled– 7/8"- open end, 5-pin, 2,5 mm^2**

Electrical data	ZK2031-1400-0xxx
Rated voltage	300 V (according to IEC 61076-2-101)
Rated current	16 A at 40 °C (according to IEC 60512-3)
Insulation resistance	≥ 100 MΩ (according to IEC 60512)

Mechanical data	
Protection class	IP 68 in screwed condition (according to IEC 60529)
Ambient temperature	-30 °C…+80 °C (according to IEC 60644-1)
Insertion cycles	≥ 100 (according to IEC 60512-9a)
Contamination level	3/2 (according to IEC 60664-1)

Mechanical properties cable	
Temperature range (cable)	-25 °C…+80 °C
Cable outside diameter	9.10± 0.25 mm
Bending radius	min. 10 x D (outer diameter), single 5 x D
Number of cycles	min. 4 million for max. travel path of 10 m
Parameter	max. velocity 3 m/s, acceleration max. 10 m/sec^2
Approbations	UL
Material properties	halogen-free as per DIN VDE 0472 part 815, flame-resistant as per UL 758/1581 (cUL-FT2)
Oil resistance	per DIN EN 60811-2-1 (168h 100°C)

Materials	
Contact material	CuZn
Contact surface	Ni, Au gal.
Contact carrier/body	TPU GF, UL 94/TPU, UL 94
Coupling screw/nut	CuZn, Ni
Seal	FPM
Cable	TPE-U (PUR), black, 5 x 2,5 mm², 5Li 9Y11Y

Ordering information	Cable length
ZK2031-1400-0200	20.00 m
ZK2031-1400-0300	30.00 m

Beckhoff® and EtherCAT are registered trademarks of Beckhoff. Information is subject to change without notice and warranted only to the extent agreed in the terms of contract. Beckhoff Automation GmbH, Eiserstr. 5, 33415 Verl, Germany, Tel.: +49 (0) 5246 963 0, Fax.: +49 (0) 5246 963 149, http://www.beckhoff.com