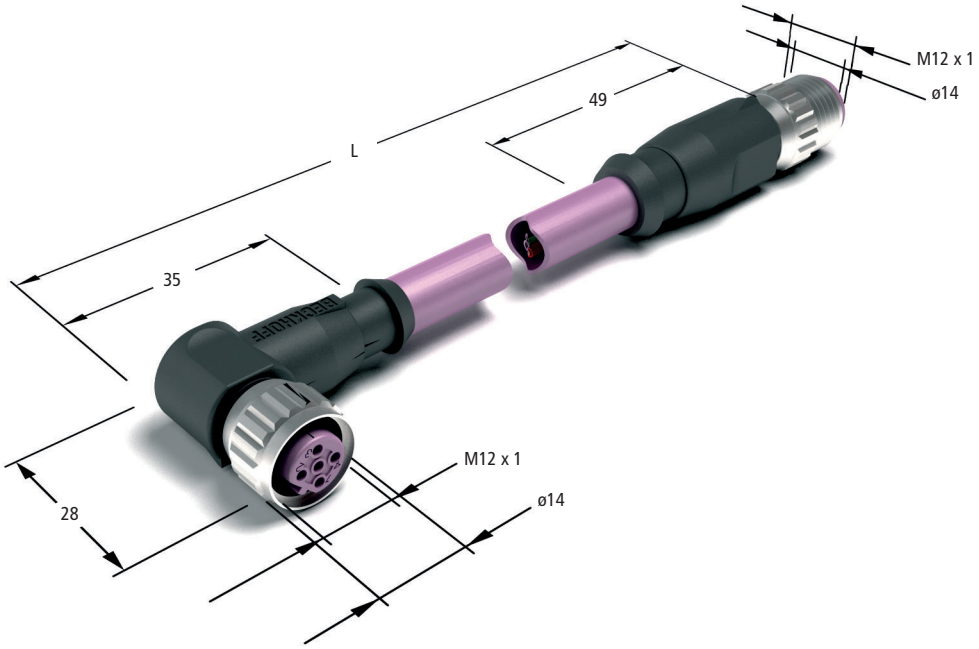

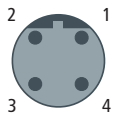

1 | n. c.
2 | green
3 | n. c.
4 | red

Plug M12, 4-pin

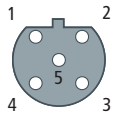

1 | n. c.
2 | green
3 | n. c.
4 | red

Socket M12, 5-pin

PROFIBUS cable | **M12 socket, angled, reverse-keyed, 5-pin – M12 plug, straight, reverse-keyed, 4-pin**

Electrical data	ZK1031-6451-1xxx
Rated voltage	160 V (according to IEC 61076-2-101)
Rated current	4 A at 40 °C (according to IEC 61076-2-101)
Insulation resistance	≥ 10 GΩ (according to IEC 60512-2)
Line capacitance	28.5 nF/km
Nominal impedance	3…20 MHz, (150 ±15) Ω 38.4 kHz, (185 ±8.5) Ω 9.6 kHz, (270 ±27) Ω
Shielding	aluminium-clad foil, braiding of tinned copper wires
Attenuation	16 MHz: 42 dB/km 4 MHz: 25 dB/km 38.4 kHz: 4 dB/km 9.6 kHz: 3 dB/km

Mechanical data	
Bus plug	B-coded
Protection class	IP 67 in screwed condition (according to IEC 60529)
Ambient temperature	-30 °C…+80 °C (according to IEC 60644-1)
Insertion cycles	≤ 100 (according to IEC 60512-9a)
Contamination level	3/2 (according to IEC 60664-1)

Mechanical properties cable	
Temperature range (cable)	-40 °C…+80 °C
Cable outside diameter	8.50 ±0.40 mm
Drag chain suitable	yes
Bending radius	7.5 x D
Number of cycles	min. 5 million
Parameter	acceleration max. 4 m/sec²
Approbations	UL Style 119100 VOL.1 SEC.8 Page 1
Material properties	RoHS-compliant, halogen-free as per DIN VDE 0472, part 815/A, flame-resistant as per IEC 60332-1-2, oil-resistant as per DIN EN 60811-2-1
Wire pair 1	stranded bare copper wire 19 x 0.14 mm (0.006 in), ø 0.65 mm (0.026 in)

Beckhoff®, TwinCAT®, EtherCAT®, Safety over EtherCAT®, TwinSAFE® and XFC® are registered trademarks of Beckhoff. Information is subject to change without notice and warranted only to the extent agreed in the terms of contract. Beckhoff Automation GmbH, Eiserstr. 5, 33415 Verl, Germany, Phone: +49 (0) 5246 963 0, Fax: +49 (0) 5246 963 149, **www.beckhoff.com**

Materials	
Contact material	CuZn
Contact surface	Ni, Au gal.
Contact carrier/body	TPU GF, UL 94/TPU, UL 94
Coupling screw/nut	CuZn, Ni
Seal	FPM
Cable	TPU (thermoplastic polyurethan), UL, 2-wire with filler, purple, shielded

Ordering information	Cable length
ZK1031-6451-1025	2.50 m
ZK1031-6451-1050	5.00 m

Beckhoff®, TwinCAT®, EtherCAT®, Safety over EtherCAT®, TwinSAFE® and XFC® are registered trademarks of Beckhoff. Information is subject to change without notice and warranted only to the extent agreed in the terms of contract. Beckhoff Automation GmbH, Eiserstr. 5, 33415 Verl, Germany, Phone: +49 (0) 5246 963 0, Fax: +49 (0) 5246 963 149, **www.beckhoff.com**