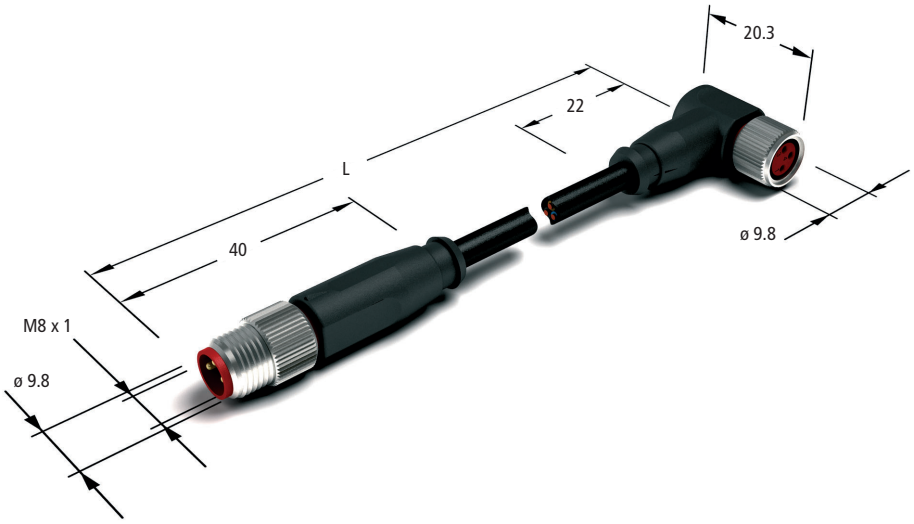

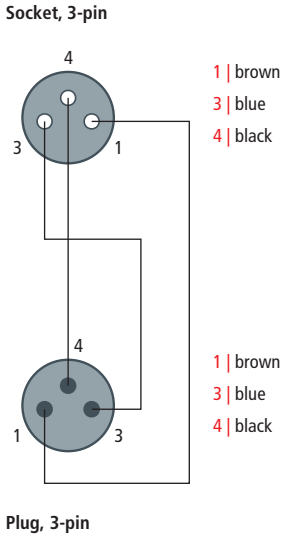

Connection cable | **M8 plug, straight, 3-pin – M8 socket, angled, 3-pin**

Electrical data	ZK2000-2124-0xxx
Rated voltage	60 V (according to IEC 61076-2-101)
Rated current	4 A at 40 °C (according to IEC 61076-2-101)
Insulation resistance	≥ 10 GΩ (according to IEC 60512-2)

Mechanical data	
Protection class	IP 67 in screwed condition (according to IEC 60529)
Ambient temperature	-30 °C…+80 °C (according to IEC 60644-1)
Insertion cycles	≤ 100 (according to IEC 60512-9a)
Contamination level	3/2 (according to IEC 60664-1)

Mechanical properties cable	
Ambient temperature	-25 °C…+80 °C
Cable outside diameter	4.40 ±0.15 mm
Bending radius	min. 6 x D
Number of cycles	min. 2 million for max. travel path of 100 m, min. 10 million for max. travel path of 20 m
Parameter	max. velocity 5 m/s, acceleration max. 10 m/sec²
Approbations	UL
Material properties	halogen-free as per DIN VDE 0472 part 815, flame-resistant as per cULus 20549

Materials	
Contact material	CuZn
Contact surface	Ni, Au gal.
Contact carrier/body	TPU, UL 94/TPU, UL 94
Coupling screw/nut	CuZn, Ni
Seal	FPM
Cable	TPU, UL20549, black, 3 x 0.25 mm², Li9Y11Y

Ordering information	Cable length
ZK2000-2124-0005	0.50 m
ZK2000-2124-0010	1.00 m
ZK2000-2124-0020	2.00 m
ZK2000-2124-0050	5.00 m
ZK2000-2124-0060	6.00 m

Beckhoff®, TwinCAT®, EtherCAT®, Safety over EtherCAT®, TwinSAFE® and XFC® are registered trademarks of Beckhoff. Information is subject to change without notice and warranted only to the extent agreed in the terms of contract. Beckhoff Automation GmbH, Eiserstr. 5, 33415 Verl, Germany, Phone: +49 (0) 5246 963 0, Fax: +49 (0) 5246 963 149, **www.beckhoff.com**